SN5842

United States Department of the Interior

MINERALS MANAGEMENT SERVICE
GULF OF MEXICO OCS REGION
IMPERIAL OFFICE BLDG . 3301 N CAUSEWAY BLVD
P O BOX 7944
METAIRIE, LOUISIANA 70010-7944

High Island Area, East Addition, South Extension

IN REPLY REFER TO LE-3-1 OCS-G 4305

January 20, 1983

ACTION

Transcontinental Gas Pipe Line Corporation **Right-of-Way**

Pipeline Right-of-Way Abandoned

On March 13, 1980, Transcontinental Gas Pipe Line Corporation filed an application for a right-of-way two hundred (200) feet in width for the construction, maintenance, and operation of a ten (10) inch natural gas pipeline, 0.55 miles in length, from Transco Exploration Company's Platform "A" in Block A-284, to a subsea tie-in with the High Island Offshore System 30-inch pipeline (OCS-G 3302) in Block A-283, all located in High Island Area, East Addition, South Extension. By Action dated May 14, 1980, the application was approved and the right-of-way granted. Proof of construction was accepted on this pipeline on March 31, 1981.

On December 8, 1982, grantee requested relinquishment of the right-of-way in its entirety, as the pipeline has been abandoned in place in accordance with FORMERLY 43 CFR 3340.1(a)(6), NOW 30 CFR 256.89(a)(6).

Therefore, the right-of-way grant is relinquished and the pipeline abandoned in place effective as of December 8, 1982, the date the request for relinquishment was filed in this office.

John L. Rankin
Acting Regional Manager

Relinquished + Abandoned in Place
A-284
A-283

NOTED—SCHONEKAS

SN5842

Transcontinental Gas Pipe Line Corporation

A Subsidiary of Transco Companies Inc.

2700 Post Oak Boulevard
P. O. Box 1396
Houston, Texas ~~XXXX~~ 77251
713-871-8000

September 9, 1982

Mr. John L. Rankin, Minerals Manager
New Orleans OCS Office
Hale Boggs Federal Building
500 Camp Street, Suite 841
New Orleans, Louisiana 70130

RE: Relinquishment of Right-of-Way for 10" Natural Gas Pipeline, Block A-284 to Block 283, High Island Area, South Addition, OCS-G 4305

Dear Mr. Rankin:

Transcontinental Gas Pipe Line Corporation, as owner and holder, hereby releases, relinquishes, and surrenders to the United States of America, all of its rights, title, and interest in and to that certain pipeline right-of-way, OCS-G 4305, granted to Transcontinental Gas Pipe Line Corporation, by the United States of America, Bureau of Land Management, dated May 14, 1980, and described as follows to wit:

> Right-of-way 200 feet in width for the construction, maintenance, and operation of a 10-inch natural gas pipeline 0.53 miles in length, from the Transco Exploration Company's "A" platform in Block A-284 to an underwater tap valve in Block A-283 all in the High Island Area, South Addition.

Transcontinental Gas Pipe Line Corporation requests relinquishment of the right-of-way in its entirety, as the pipeline has been abandoned in place in accordance with 43 CFR 3340.1 (a)(6).

Executed This 13TH Day of September, 1982.

By: John C. Boehm
John C. Boehm
Senior Vice-President

ACCEPTED
Acting Regional Manager
Effective Date DEC 8 1982

BEST AVAILABLE COPY

RECEIVED

Dec 8 11 04 AM '82

MINERALS MANAGEMENT SERVICE
GULF OF MEXICO OCS REGION
METAIRIE, LOUISIANA

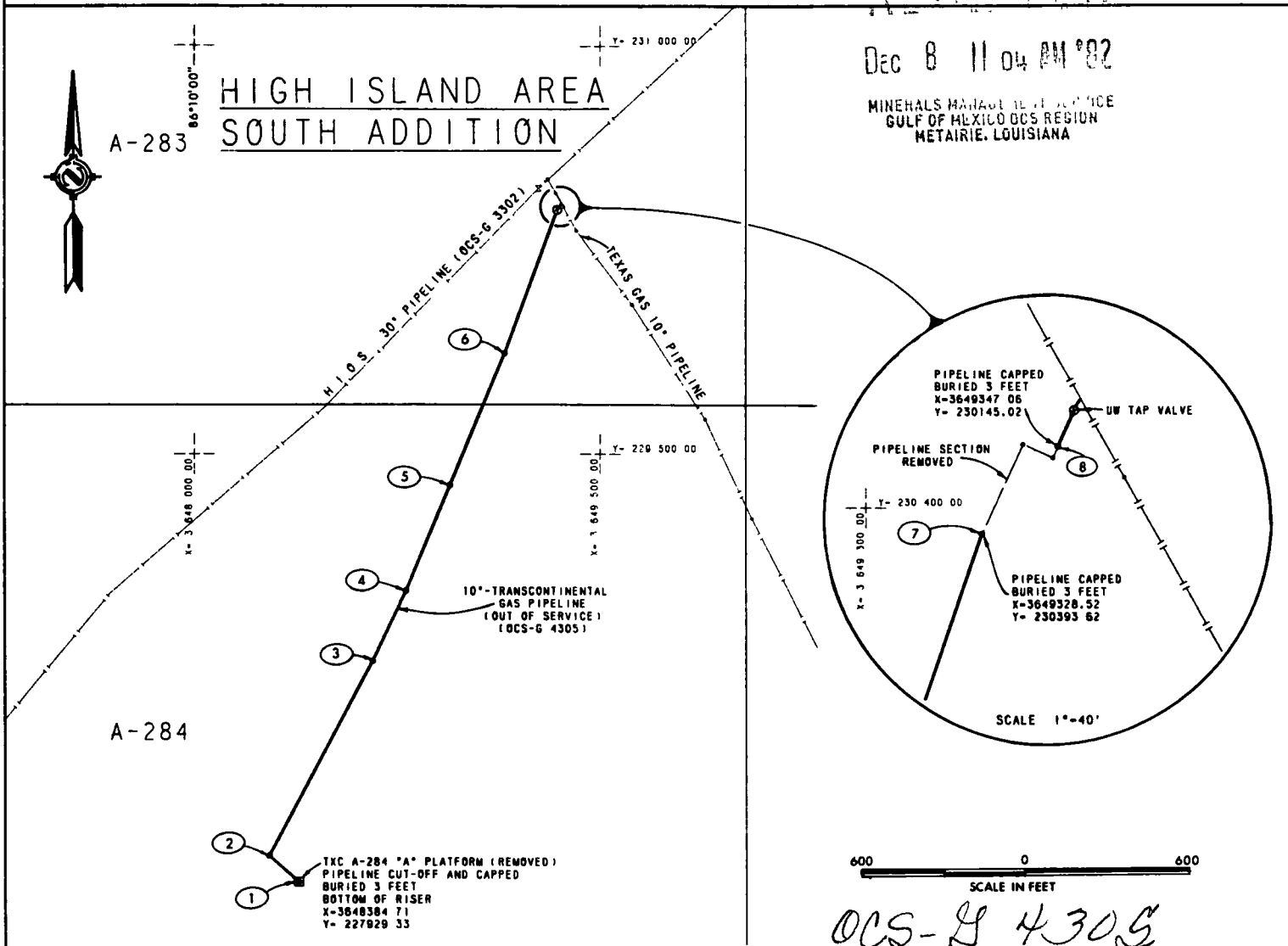

OCS-G 4305

POINT	X	Y	REMARKS
1	3648384.71	227929.33	BOTTOM OF RISER PLTF A-284
2	3648275.60	228024.76	
3	3648659.36	228738.37	
4	3648783.21	228996.48	
5	3648946.29	229385.97	
6	3649148 24	229870 71	
7	3649328 52	230393 62	END OF PIPELINE (OUT OF SERVICE)
8	3649347.06	230145.02	BEGIN UWTV ASSEMBLY

THIS PIPELINE HAS BEEN PLACED OUT OF SERVICE BY TRANSCONTINENTAL GAS PIPE LINE CORPORATION IT WAS PURGED PRIOR TO BEING CAPPED ON BOTH ENDS AND FILLED WITH SEAWATER TOTAL PIPELINE LENGTH HAS BEEN SHORTENED FROM 2784 81' TO 2749 43' BY THE REMOVAL OF THE UNDERWATER TIE-IN ASSEMBLY

THIS MAP REFLECTS THE AS-BUILT COORDINATE LOCATION OF THE PIPELINE AS DETERMINED BY AN MRB-201 [illegible] SYSTEM. THE PIPE WAS BURIED TO A DEPTH OF AT LEAST 3 FEET BELOW THE UNDISTURBED GULF BOTTOM

STATE OF TEXAS
RUSSELL J. JUDAH
18284
REGISTERED PROFESSIONAL ENGINEER

NOTE
1 BEARINGS, COORDINATES AND DISTANCES ARE BASED UPON TEXAS STATE PLANE COORDINATE SYSTEM (LAMBERT SOUTH ZONE)
2 AS-BUILT RIGHT-OF-WAY TO BE RELINQUISHED IS 200 FEET WIDE

2 Nov '82 — DATE
R. J. Judah — MANAGER OF CONSTRUCTION
18284 — NUMBER

REFERENCE DRAWING — DWG NO

TRANSCONTINENTAL GAS PIPE LINE CORPORATION
A Subsidiary of Transco Energy Company
Engineering Department
Houston, Texas

10" NATURAL GAS PIPELINE
REMOVED FROM SERVICE
IN THE GULF OF MEXICO
HIGH ISLAND AREA BLK A-284 TO BLK A-283
OFFSHORE TEXAS

DRAWN BY CALCOMP	DATE 10/27/82	APPROVED BY RoG	DATE 10-28-82
DESIGNED BY J R N	DATE 10/27/82	APPROVED BY	
APPROVED BY DRAFTING S	DATE 10-30-82	OWNER James M. Hine	
W B NO	SCALE 1 IN =600 FT	SP DS & GUN 21-12-2020	
22	SHEET 1 OF 1	DWG NO D1-4A-002	

BY / REVISION / DATE / NO

BEST AVAILABLE COPY

United States Department of the Interior

BUREAU OF LAND MANAGEMENT

NEW ORLEANS OUTER CONTINENTAL SHELF OFFICE
HALE BOGGS FEDERAL BUILDING
500 CAMP STREET—SUITE 841
NEW ORLEANS, LA 70130

IN REPLY REFER TO
OCS-G 4305
SN 5842

High Island Area,
East Addition,
South Extension

March 31, 1981

ACTION

Transcontinental Gas Pipe Line Corporation	:	Right of Way for Pipe Line
	:	Date of Permit: 5/14/80
	:	Decision Requesting Proof of Construction Dated:
	:	Proof of Construction Received: 3/23/81

Proof of Construction Accepted

The above-captioned permittee has submitted the evidence required by the law and regulations 43 CFR 3340.3(a). The proof of construction is hereby accepted and approved with minor deviations.

John L. Rankin
Manager

cc:
U. S. Geological Survey
(w/dwg. and reports)

APR 15 1981
NOTED – NEMECEK

Transcontinental Gas Pipe Line Corporation

A Subsidiary of Transco Companies Inc.

2700 South Post Oak Road
P O Box 1396
Houston, Texas 77001
713-871-8000

March 19, 1981

Mr. John L. Rankin, Manager
New Orleans OCS Office
Bureau of Land Management
Hale Boggs Federal Building
500 Camp Street, Suite 841
New Orleans, Louisiana 70130

Dear Mr. Rankin:

Reference: OCS-G 4305, 10" Pipeline from Block A-284 to Block A-283 High Island Area, East Addition, South Extension, Gulf of Mexico
Line No. 1-1014, R/W 1, W.O. 5291.37

In compliance with the U. S. Department of Interiors 43 CFR 3300: Subpart 3340.3 and appropriate guidelines, enclosed are three copies of as-built Drawing Number 21-12-2020/DI-4A-001, sheets 1 and 2 of 2. Also enclosed are three copies each of the following listed information.

Hydrostatic Test Procedure
Hydrostatic Test Pressure and Temperature Charts
Hydrostatic Test Data Sheets

After your review, please issue Transcontinental your action of proof of construction accepted.

Yours very truly,

Virgil N. Wallace

Virgil N. Wallace
Permit Engineer

VNW:jln
Enclosures

BEST AVAILABLE COPY

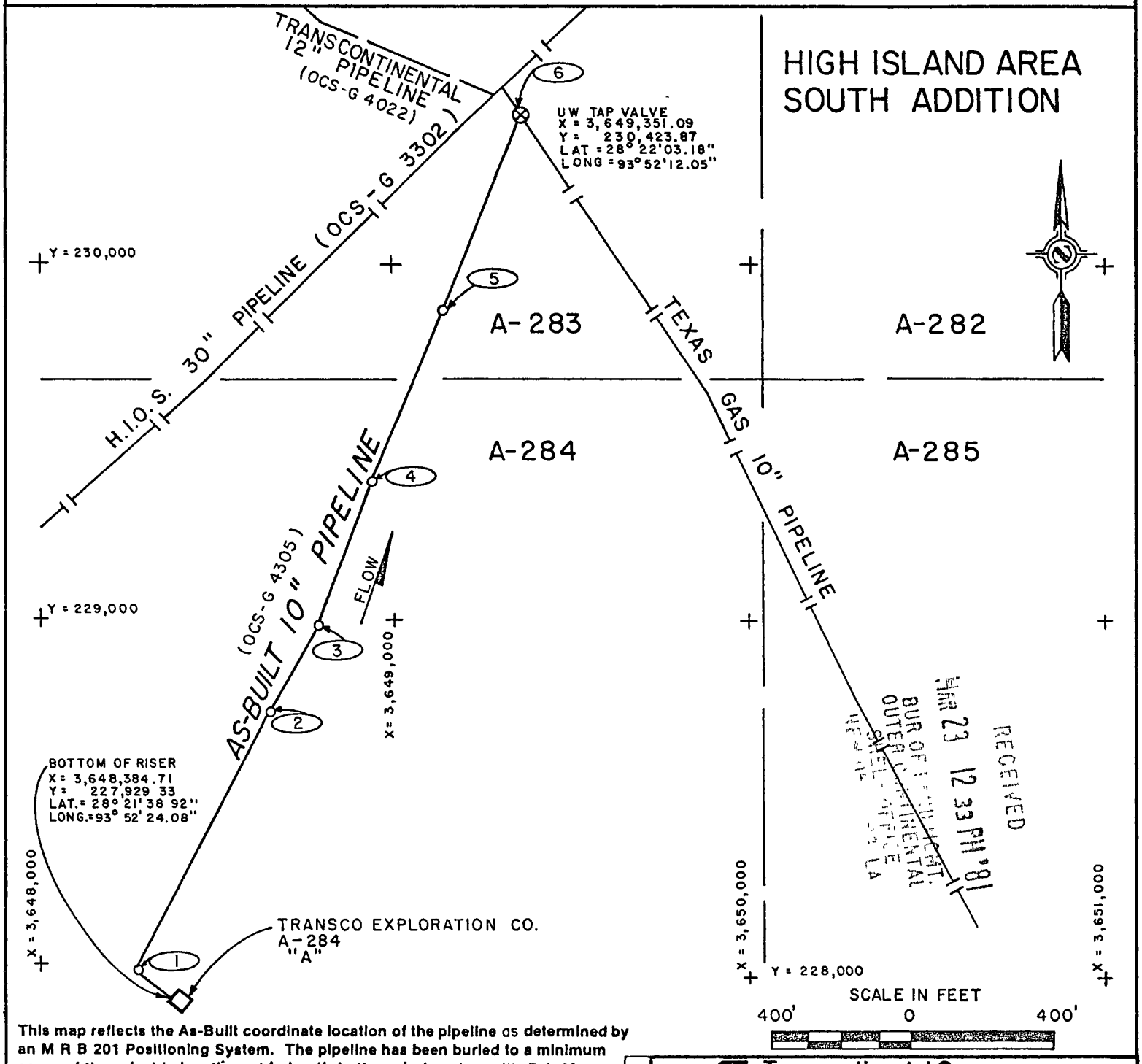

This map reflects the As-Built coordinate location of the pipeline as determined by an M R B 201 Positioning System. The pipeline has been buried to a minimum cover of three feet below the natural gulf bottom, in keeping with B L M Decision OCS-G 4305. This pipeline was designed and constructed in accordance with the Department of Transportation Regulation, Part 192, Title 49.

RUSSELL J. JUCHI
18284
REGISTERED PROFESSIONAL ENGINEER

A. J. Juchi
MANAGER OF CONSTRUCTION

6 MAR '81
DATE

18284
NUMBER

Transcontinental Gas Pipe Line Corporation Engineering Department Houston, Texas
A Subsidiary of Transco Companies Inc.

AS-BUILT 10" NATURAL GAS PIPELINE
IN GULF OF MEXICO
HIGH ISLAND AREA BLK. A-284 TO BLK. A-283
OFFSHORE TEXAS

Drawn By JKG	Date 2/17/81	Approved By RoG	Date 3-6-81
Checked By TMS	Date	Henry A. Ingram	
Approved By Drafting S	Date 2-6-81	Approved By	Engineer
W. O. No 5291.37	Scale SHOWN	General Group & Gun Number 21-12-2020	
S Rev	Sheet 1 of 2	Dwg No. DI-4A-001	

By / Revision / Date / No

PT.	X	Y
RISER A284-"A"	3,648,384.71'	227,929.33'
1	3,648,275.60'	228,024.76'
2	3,648,659.36'	228,738.37'
3	3,648,783.21'	228,996.48'
4	3,648,946.29'	229,385.97'
5	3,649,148.24'	229,870.71'
UWTV	3,649,351.09'	230,423.87'

NOTES:

1. Bearings, Coordinates and Distances are based upon the Texas State Plane Coordinate System (Lambert), South Central Zone.
2. This pipeline is used to transport natural gas from the Texas O. C. S. to the continental United States.
3. As-Built Permanent Right of Way is 200 feet wide.
4. The total length of 10" pipeline from the bottom of the riser in Block A-284 to the tie-in assembly at the HIOS U W T V in Block A-283 is 2,784.81 feet or 0.53 miles.

This pipeline was designed and constructed in accordance with the Department of Transportation Regulation, Part 192, Title 49.

STATE OF TEXAS
RUSSELL J. JUDAH
18284
REGISTERED PROFESSIONAL ENGINEER

R. J. Judah
MANAGER OF CONSTRUCTION

6 MAR '81
DATE

18284
NUMBER

Transcontinental Gas Pipe Line Corporation
Engineering Department
Houston, Texas
A Subsidiary of Transco Companies Inc.

AS-BUILT 10" NATURAL GAS PIPELINE
IN GULF OF MEXICO
HIGH ISLAND AREA BLK. A-284 TO BLK. A-283
OFFSHORE TEXAS

Drawn By JKG	Date 2/17/81	Approved By ROG	Date 3-6-81
Checked By rms	Date	Approved By Henry H. Ingram, Engineer	
Approved By Drafting S	Date 3-6-81		
W O No 5291.37	Scale NONE	General Group & Gun Number 21-12-2020	
S PEU	Sheet 2 of 2	Dwg. No DI-4A-001	

Revision | By | Date | No.

Transcontinental Gas Pipe Line Corporation
2700 South Post Oak Road
P O Box 1396
Houston Texas 77001

5.10 Testing

5.101 Onshore - This shall include all work and equipment for hydrostatically testing the completed platform piping, riser assemblies, valve assembly(s) and meter station(s) onshore.

The hydrostatic testing shall be performed after the piping has been assembled. Blind flanges and welding caps shall be used to blank openings where required.

Only fesh clean water shall be used for the test. All air shall be evacuated from the piping and displaced with water.

The minimum test pressure will be stated in the Job Description. Pressure shall be determined by a dead weight tester and corrected as necessary for changes in water temperature. Test data shall be recorded on T.G.P.L. Form 1250. The test period shall be for a duration of four (4) hours. Only test data indicating no pressure drop during the test period will be acceptable. If the piping does not meet this test, repairs as necessary shall be made, and the test repeated until an acceptable test is made.

The piping and meter station shall be cleared of all water and purged with air to remove all moisture residue.

5.102 Offshore - This specification covers the testing of the completed pipeline. The pipeline shall be tested using the fluid set out in the Job Description, after completing the cleaning and trenching operations. Contractor may, with the approval of Company, test the pipe in sections or prior to cleaning and trenching. This test, however, shall not be an acceptance test.

The test pressure shall be held on the pipeline for 8 hours after pressure stabilization and shall be checked by means of a standard dead weight gauge, and the data recorded on T.G.P.L. Form 1250. No drop in pressure, after making corrections for changes in temperature and barometric pressure, shall be allowed.

If the pipeline does not meet this test, such steps as necessary shall be taken to cause the pipeline to meet the requirements of the above test.

5.102 Offshore (Continued)

After a hydrostatic test has been accepted, the pipeline shall be freed of water by running as many cylinders or squeegees as deemed necessary, but not less than two. These may be propelled with gas or air. If Company cannot conveniently make gas available Contractor shall furnish air. The Company will handle the gas if it is used for dewatering.

When the platform piping and meter station(s) have been hydrostatically tested independent of the pipeline, the piping shall be drained of all water and thoroughly dried internally by use of compressed air.

TGPL-1250
REV 11-77

Transcontinental Gas Pipe Line Corporation
A Subsidiary of Transco Companies Inc

BEST AVAILABLE COPY

Qualification Test Record

Ref DOT 192.501 and 192.719

Account No.	Contract No. (Prime)
W.O. 5291-37-38	27881

PAGE 1

Prime Contractor: Mc DerMoTT

Test Contractor:

Description and Location of Pipeline or Appurtenance Being Tested: 0.56 miles of 10" P/L From Block 283 To BLK 284 HI

LINE DATA

Description of Pipe	Length of Test Section	From (M.P. or Blk.)	To (M.P. or Blk.)	Survey Station No.
O.D. 10.750" W.T. 0.500" Yld.	0.560 miles	BLK A283 HI	BLK A284 HI	From To
O.D. 10.750" W.T. 0.365" Yld.	Test Section No.	Elevation of High Point + 17'0"		Elevation of Low Point - 194'0"
O.D. 10.750" W.T. 0.438" Yld.	Drawing Nos. (Alignment or Fabrication)			
O.D. W.T. Yld.	Pipe Manufacturer U.S. STEEL			Purchase Order No 244808 MSR 0-1-53

TEST DATA

Type of Test	Date Fill Started	Date Fill Completed	Water Treatment	Avg. Temp. Water, Air or Gas Fill
Gas ☐ Air ☐ Water ☑			Chem. ☐ Filter ☐	

General Weather Conditions

Location and Elevation Where Dead Weight Readings Taken: M.P. or Block Location BLK A284 HI Elevation + 7'0"

Minimum Test Pressure Specified (High Point): 2264 PSI (_____% of Specified Min. Yield)

Maximum Allowable Test Pressure (Low Point): 2681 PSI (_____% of Specified Min. Yield)

TEST WATER AND LEAK DATA

Fill Water	Source	Location	Survey Sta.	M.P. or Block
Test Water Disposal Point	Location		Survey Sta	M.P. or Block
Leak or Test Failures During Test	Location		Survey Sta.	M.P. or Block
Acidity (pH) of Fill Water	During Fill		During Disposal	
Chemicals Added to Fill Water	Type		Quantity	

DEAD WEIGHT PRESSURE AND TEMPERATURE LOG

Date of Readings	Time of Readings	Pressure P.S.I.G.	Temperature of Ambient	Ground	Pipe	Remarks
30	0220					Started Press up
	0306	2685	81°		83°	
	0320	2672	81		82	
	0336	2669	81		82	
	0351	2668	81		82	
	0405	2667	81		82	
	0421	2665	81		82	
	0435	2665	80		82	
	0450	2663	80		82	
	0505	2663	80		82	
	0521	2662	80		82	
	0536	2662	80		82	
	0555	2661	79		82	
	0621	2661	79		82	
	0635	2661	79		82	
	0650	2661	79		82	
	0705	2661	79		82	
	0720	2661	79		82	
	0735	2661	79		82	
	0750	2661	79		82	
	0805	2661	79		82	
	0820	2661	79		82	
	0835	2661	79		82	
	0850	2660	79		82	
	0905	2660	82		82	

RECEIVED MAR 29 12 33 PM '81 BUREAU OF ENVIRONMENTAL QUALITY SITE ENGINEER HEALTH DIVISION LA

Report Prepared By	Date	Test Supervised By
J. Rose & Martin	9-5-80	[illegible]

Test Witnessed By
(1) J. Richmond - CSI
(2)

Test Accepted By	Date	Hour
[illegible]	9-5-80	

Attached To Original Copy. Pressure Charts ☐ Temperature Charts ☐ Profile Book Ref. _____

Distribution: 1. Pipe Line Design Engineer ☐ 2. Pipe Line Construction Supt. ☐ 3 Field File ☐ 4. Permits Engr ☐

TGPL-1250
REV 11-77

Transcontinental Gas Pipe L _ Corporation
A Subsidiary of Transco Companies Inc

Qualification Test Record

BEST AVAILABLE COPY

Ref DOT 192 501 and 192.719

Account No.	Contract No. (Prime) 27881

PAGE 2

Prime Contractor	Test Contractor

Description and Location of Pipeline or Appurtenance Being Tested

LINE DATA

Description of Pipe O.D. W.T. Yld.	Length of Test Section	From (M.P. or Blk.)	To (M.P. or Blk.)	Survey Station No. From To
O.D. W.T. Yld.	Test Section No.	Elevation of High Point	Elevation of Low Point
O.D. W.T. Yld.	Drawing Nos. (Alignment or Fabrication)		
O.D. W.T. Yld.	Pipe Manufacturer	Purchase Order No	

TEST DATA

Type of Test Gas ☐ Air ☐ Water ☐	Date Fill Started	Date Fill Completed	Water Treatment Chem. ☐ Filter ☐	Avg. Temp. Water, Air or Gas Fill
General Weather Conditions	Location and Elevation Where Dead Weight Readings Taken: M.P. or Block Location		Elevation	
Minimum Test Pressure Specified (High Point) _____ PSI (_____% of Specified Min. Yield)		Maximum Allowable Test Pressure (Low Point) _____ PSI (_____% of Specified Min. Yield)		

TEST WATER AND LEAK DATA

Fill Water	Source:	Location:	Survey Sta.	M.P. or Block
Test Water Disposal Point	Location:		Survey Sta	M P or Block
Leak or Test Failures During Test	Location		Survey Sta.	M P. or Block
Acidity (pH) of Fill Water	During Fill	During Disposal:		
Chemicals Added to Fill Water	Type	Quantity		

DEAD WEIGHT PRESSURE AND TEMPERATURE LOG

Date of Readings	Time of Readings	Pressure P.S.I.G.	Temperature of Ambient	Ground	Pipe	Remarks
9-5-80	09 15	2659	82		82	
	09 30	2657	82		84	
	10 00	2657	82		84	
	10 30	2656	83		84	
	11 00	2655	82		84	
	11 30	2655	82		84	
	12 00	2655	78		84	
	12 30	2652	75		~~77~~ 78	
	13 00	2652	75		77	
	1330	2652	76		78	
	1400	2652	78		80	Begin bleeding down to 1500 pounds
	1430	1503	78		80	
	1500	1503	79		80	
	1530	1503	79		82	
	1600	1503	80		83	
	1630	1503	81		84	Test accepted by Sabine Pass office

Report Prepared By: De Rosa & Martin	Date 9/5/80	Test Supervised By: [illegible]
Test Witnessed By (1) J. Redmond - CSI	(2)	
Test Accepted By See Page 1	Date 9-5-80	Hour

Attached To Original Copy. Pressure Charts ☐ Temperature Charts ☐ Profile Book Ref. _____

Distribution: 1. Pipe Line Design Engineer ☐ 2. Pipe Line Construction Supt. ☐ 3. Field File ☐ 4. Permits Engr ☐

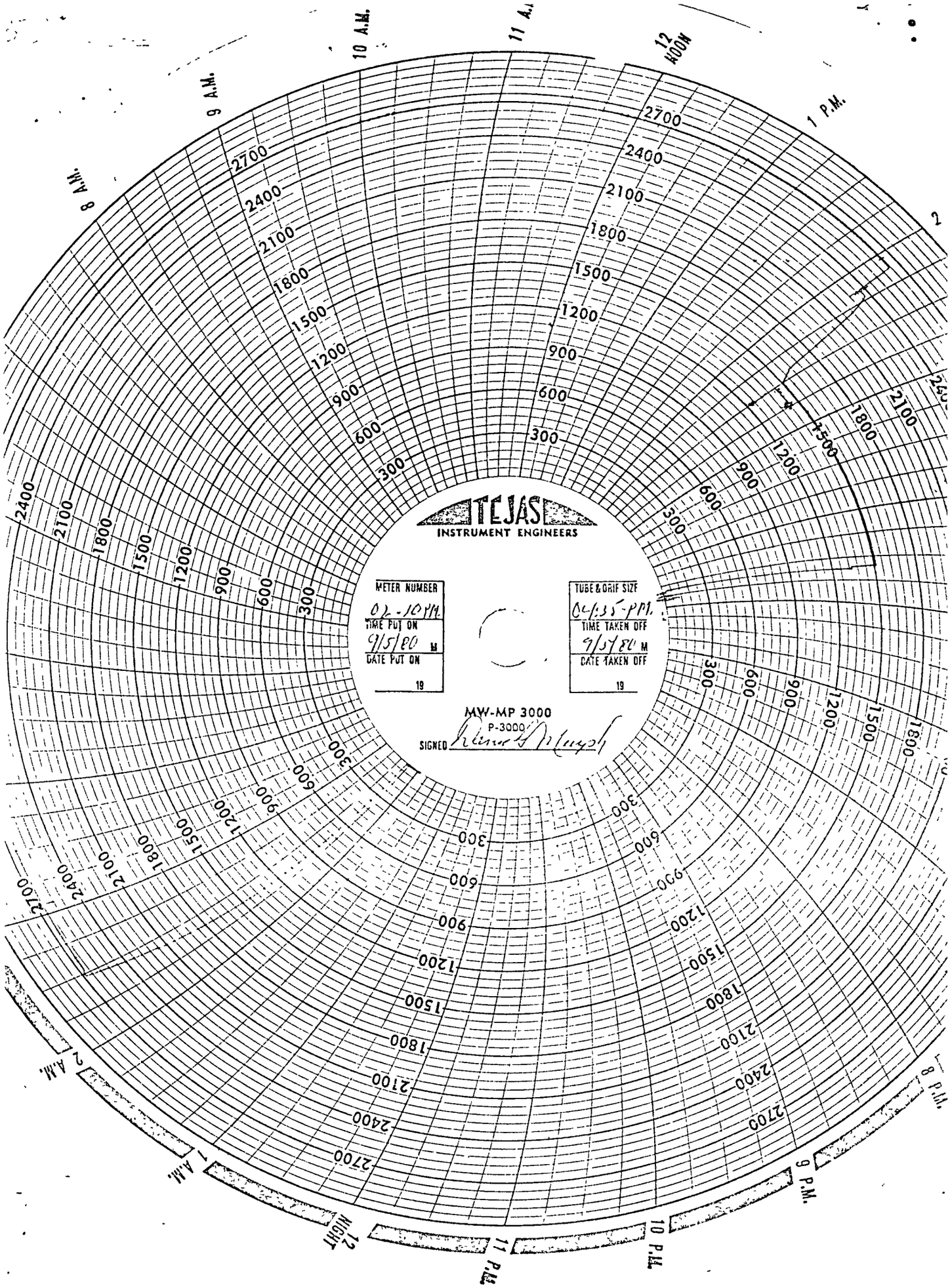

BEST AVAILABLE COPY

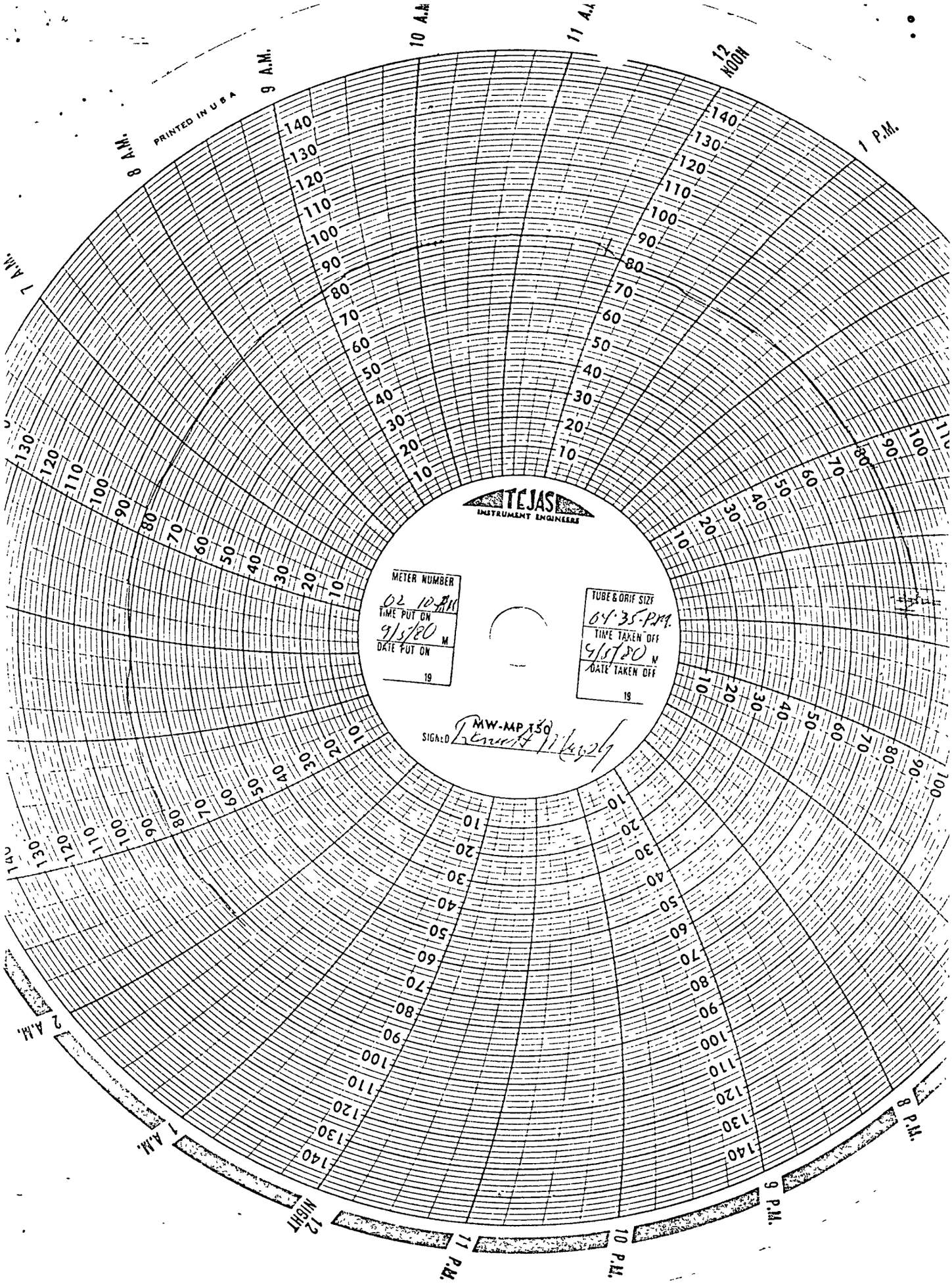

BEST AVAILABLE COPY

ATTACHMENT 4

NOTIFICATION OF CONSTRUCTION

Date: 7-7-80

1. OCS Number G-4305
2. Name of Company Transcontinental Gas Pipeline Corp.
3. Name of Contractor McDermott
4. Name or Number of Barge #22
5. Size and Length of Pipeline 10.75 INCH GAS .55 Miles long
6. From where to where Transco Exploration Co. "A" Platform in Block A-284 (area, block number and platform) to Subsea tie with OCS-G 3302 in Block A-283 all in HIA.
7. Where construction begins "A" Platform in HIA-A-284 (area, block number)
8. When will barge begin July 9, 1980
9. How long will barge be on job 30 days
10. Nearest avaialble heliport on Barge #22
11. Does the pipeline cross or is it in close proximity to fairways or anchorage areas?

    Yes____ No ✓

Name of Company Contact Mike Blackwood

Telephone Number (713) 971-2357

BLM's Notification to: USGS date N/A

U.S. Coast Guard date N/A

(#6236)

NOTE: Notification may be made by calling Autry Britton at A.C. 504 589-6541 between the hours of 7:45 a.m. and 4:15 p.m. Monday through Friday.

Autry J. Britton

TGPL-633
REV 1-79

Transcontinental Gas
Pipe Line Corporation

A Subsidiary of Transco Companies Inc.

2700 South Post Oak Road
P O Box 1396
Houston, Texas 77001
713-871-8000

August 19, 1980

Address Reply To

P.O. Drawer F
Sabine Pass, Texas 77655

U.S. Bureau of Lnad Management
Hale Boggs Bldg.
500 Camp St. Suite 841
New Orleans, Louisana 70131

Atten. Mr. Britton,

This letter is written to confirm our telephone conversation on August 19,1980, to advise you that our contractor, J. Ray McDermott proposes to commence hydrostatic testing on permit OCS-G-4315 on/about 8-21-80 and permit OCS-G-4305 on/about 8-27-80.

Yours truly,

J.B. Coward
Chief Inspector
Transcontinental Gas Pipe Line Corp.

IBC/mgb

cc: M.J. Hunter
Paul Newton
File

ATTACHMENT 5

NOTIFICATION OF HYDROSTATIC TEST

Date: 8-19-80

1. OCS Number 4305
2. Name of Company TRANSCONTINENTAL GAS P/L CORP.
3. Size of Pipeline 10" GAS Length _____ Miles .55
4. From where to where Transco Exploration Co's "A" Platform in BL A-284 (area, block number and platform name) to subsea tie with OCS-G 3302 in Block A-283 all in High ISLAND Area.
5. Platform where hydrostatic test instruments will be set up "A" Platform in Block A-284 H.I.A.
6. Contractors Name and Barge Name or Number McDermott
7. Date and Time of Proposed Test 8-27-80

Name of Company Contact Mike Blackwood

Telephone Number (713) 971-2357

BLM's Notification To: USGS N/A

U. S. Coast Guard N/A

NOTE: Notification may be made by calling Autry Britton at A.C. 504 589-6541 between the hours of 7:45 a.m. and 4:15 p.m. Monday through Friday.

Autry J. Britton

TGPL-633
REV 1-79

Transcontinental Gas Pipe Line Corporation

A Subsidiary of Transco Companies Inc.

2700 South Post Oak Road
P O Box 1396
Houston, Texas 77001
713-871-8000

July 7, 1980

Address Reply To

P.O. Drawer F
Sabine Pass, Texas
77655

U.S. Bureau of Land Management
Hale Boggs Building
500 Camp St. Suite 841
New Orleans, La. 70131

Atten. Mr. Britton

This letter is written to confirm our telephone conversation on July 7, 1980, to advise you that our contractor, J. Ray McDermott, proposes to commence work on the following permits, OCS-G-4305, OCS-G-4019 and OCS-G-4315, on/about July, 9, 1980. This work will be done by the lay barge #22, which is equipped with a heliport.

It is estimated that this work will take approximately 90 days to complete.

Yours truly,

I.B. Coward
Chief Inspector
Transcontinental Gas Pipe Line Corp.

IBC/mgb

cc: M.J. Hunter
Paul Newton
File

RECEIVED
JUL 14 1 48 PM '80
BUR OF LAND MGMT
OUTER CONTINENTAL SHELF

NEW ORLEANS OCS
FILE CODE
ROUTE CONTROL
MGR.
ASST. MGR.
JUL 11 1980
P. LEGAL
PAD
EAD
OPS
STUDIES
MGMT. SER.

SN 5842

OCS-G 4305

BEST AVAILABLE COPY

High Island Area,
East Addition,
South Extension

May 14, 1980

Transcontinental Gas Pipe Line Corporation

Right-of-Way

ACTION: APPLICATION APPROVED

Your application for a right-of-way 200 feet in width for the construction, maintenance, and operation of a ten (10) inch natural gas pipeline, 0.55 miles in length, from Transco Exploration Company's Platform "A" in Block A-284, to a subsea tie-in with the High Island Offshore System 30-inch pipeline (OCS-G 3302) in Block A-283, all located in High Island Area, East Addition, South Extension, dated March 10, 1980, with its attachments is hereby approved with the following addition and correction:

1. Buoy the existing HIOS 30-inch pipeline to prevent possible damage during construction of the proposed 10-inch pipeline.

John L. Rankin
Manager

cc:
Geological Survey, USDI
Office of Pipeline Safety Operations, USDT

210/M.Holmes/dg/5-14-80

Schowerhs 4/25/80
Steuhr 4/28/80
Solanas 4/29/80
Marsh 5-1-80

BEST AVAILABLE COPY

In Reply Refer To OS-5

MAY 1 1980

Memorandum

To: Manager, Bureau of Land Management, 841 Hale Boggs Federal Building, 500 Camp Street, New Orleans, Louisiana 70130

From: Conservation Manager, Gulf of Mexico OCS Region

Subject: Transcontinental Gas Pipe Line Corporation's Pipeline Application, BLM OCS-G 4305

We have reviewed the safety features and design specifications for the subject Right-of-Way Application, dated March 10, 1980, in accordance with the MOU dated August 1, 1974. It is for the construction, maintenance and operation of a 10 3/4-inch natural gas and gas condensate pipeline 2,896 feet in length from Transcontinental Exploration Company's Platform A, High Island Block A-284, Lease OCS-G 3951, to a subsea tie-in with a 30-inch HIOS pipeline in High Island Block A-283, Lease OCS-G 2404.

Based upon information submitted in the application, the design characteristics of this pipeline are calculated to be as follows:

Pipeline Component	Maximum Allowable Operating Pressure/WP Ratings
Submerged component	2,053 psig
Riser component	1,628 psig
Valves, flanges, fittings	1,440 psig

The hydrostatic pressure test with water will be in the range of 2,624 to 2,681 psig for eight hours for the submerged component. The riser will be preinstallation-tested to a pressure in the range of 2,995 to 3,060 psig for four hours. The ANSI 600 valves should not be subjected to a test-pressure differential greater than 1,440 psig. The ANSI 600 valves, flanges, and fittings should not be subjected to a body test greater than 2,175 psig.

Based on these calculations and a maximum allowable operating pressure (MAOP) of 1,440 psig of the receiving 30-inch HIOS pipeline (BLM OCS-G 4305), we recommend that the MAOP for this pipeline be 1,440 psig, and that this pressure may be exceeded only when hydrostatically pressure-testing the pipeline. We also recommend that valves and taps at the subsea tie-in be provided with a minimum of three feet of cover, either through burial or with sandbags.

Our records indicate there are two existing pipelines within 4,000 feet of the subject pipeline. We recommend that the applicant be advised of the presence of these lines so that they can be avoided in the planning and conduct of his operations.

The technical aspects of the proposed pipeline are acceptable in accordance with appropriate regulations and standards.

We would appreciate receiving a copy of the plat showing the location of the pipeline as installed.

[redacted]

FOR Lowell G. Hammons

cc: 1502-01 BLM OCS-G 4305 (w/orig appln) (OS-5)
CM Reading File
OMS-4 (w/cy of location plat)

GHSchonekas:nnk:4/25/80

United States Department of the Interior

GEOLOGICAL SURVEY

IMPERIAL OFFICE BLDG., 3301 N. CAUSEWAY BLVD.
NEW ORLEANS OCS 7944
METAIRIE, LOUISIANA 70010

TEL. (504) 837-4720

NEW ORLEANS OCS
FILE COPY
ROUTE INITIAL
MGR.
ASST. MGR.
MAY 02 1980
P. LEGAL
PAO
EAD
OPS
STUDIES
MGMT. SER.

In Reply Refer To: OS-5

MAY 1 1980

Memorandum

To: Manager, Bureau of Land Management, 841 Hale Boggs Federal Building, 500 Camp Street, New Orleans, Louisiana 70130

From: Conservation Manager, Gulf of Mexico OCS Region

Subject: Transcontinental Gas Pipe Line Corporation's Pipeline Application, BLM OCS-G 4305

RECEIVED
MAY 2 11 80
BLM OFFICE
QUEAR CONSERVATION

We have reviewed the safety features and design specifications for the subject Right-of-Way Application, dated March 10, 1980, in accordance with the MOU dated August 1, 1974. It is for the construction, maintenance and operation of a 10 3/4-inch natural gas and gas condensate pipeline 2,896 feet in length from Transcontinental Exploration Company's Platform A, High Island Block A-284, Lease OCS-G 3951, to a subsea tie-in with a 30-inch HIOS pipeline in High Island Block A-283, Lease OCS-G 2404.

Based upon information submitted in the application, the design characteristics of this pipeline are calculated to be as follows:

Pipeline Component	Maximum Allowable Operating Pressure/WP Ratings
Submerged component	2,053 psig
Riser component	1,628 psig
Valves, flanges, fittings	1,440 psig

The hydrostatic pressure test with water will be in the range of 2,624 to 2,681 psig for eight hours for the submerged component. The riser will be preinstallation-tested to a pressure in the range of 2,995 to 3,060 psig for four hours. The ANSI 600 valves should not be subjected to a test-pressure differential greater than 1,440 psig. The ANSI 600 valves, flanges, and fittings should not be subjected to a body test greater than 2,175 psig.

Based on these calculations and a maximum allowable operating pressure (MAOP) of 1,440 psig of the receiving 30-inch HIOS pipeline (BLM OCS-G ~~4305~~ OCS-G 3302), we recommend that the MAOP for this pipeline be 1,440 psig, and that this pressure may be exceeded only when hydrostatically pressure-testing the pipeline. We also recommend that valves and taps at the subsea tie-in be provided with a minimum of three feet of cover, either through burial or with sandbags.

Our records indicate there are two existing pipelines within 4,000 feet of the subject pipeline. We recommend that the applicant be advised of the presence of these lines so that they can be avoided in the planning and conduct of his operations.

The technical aspects of the proposed pipeline are acceptable in accordance with appropriate regulations and standards.

We would appreciate receiving a copy of the plat showing the location of the pipeline as installed.

J. Courtney Reid
for Lowell G. Hammons

United States Department of the Interior

BUREAU OF LAND MANAGEMENT

NEW ORLEANS OUTER CONTINENTAL SHELF OFFICE

HALE BOGGS FEDERAL BUILDING

500 CAMP STREET—SUITE 841

NEW ORLEANS, LA 70130

IN REPLY REFER TO

OCS-G 4305 - O

April 3, 1980

Memorandum

To: Conservation Manager
Gulf of Mexico OCS Operations

From: Manager
New Orleans OCS Office

Subject: Review of Pipeline Right-of-way Application (OCS-G 4305)

In accordance with the memorandum of understanding between the Bureau of Land Management and U. S. Geological Survey signed August 1, 1974, the subject application is enclosed.

Please review the technical aspects of the proposed pipeline. If you have any questions regarding this matter, please contact Mr. Autry J. Britton of this office.

NOTED—SCHONEKAS APR 4 1980

Enclosures
1-Application dated March 10, 1980
2-Engineering Data, undated
3-Drawing No. 21-2020/DI-A-001, Sheets 1 thru 4 of 4
4-Drawing No. 21-2022/DI-A-002, Sheet 1 of 1

Transcontinental Gas Pipe Line Corporation

A Subsidiary of Transco Companies Inc.

2700 South Post Oak Road
P. O. Box 1396
Houston, Texas 77001
713-871-8000

March 10, 1980

Mr. John L. Rankin, Manager
New Orleans OCS Office
Bureau of Land Management
Hale Boggs Federal Building
500 Camp Street, Suite 841
New Orleans, Louisiana 70130

Re: Application for right of way for proposed 10" pipeline Block A-283 to A-284 High Island Area, Offshore Texas, Gulf of Mexico
Line No. 1-1014, R/W 1

Dear Mr. Rankin:

Pursuant to the authority granted in Section 5(e) of the Outer Continental Shelf Lands Act (67 Stat. 462), (43 U.S.C. 1331), as amended (92 Stat. 629), and in compliance with the regulations contained in Title 43 CFR 3340, Transcontinental Gas Pipe Line Corporation hereby applies, in triplicate, for a right-of-way two hundred feet (200 ft.) in width to construct, maintain and operate a 10" natural gas pipeline as shown on the following drawings.

Block Survey Report

Vicinity, Route, Profile and
Cathodic Protection Drawing,
Drawing Number 21-2020/DI-A-001

Schematic Drawing
Drawing Number 21-2022/DI-A-002

The 10" pipeline will be used to transport natural gas and condensate from the proposed Transco Exploration platform "A" located in Block A-284 to an existing underwater valve assembly on the 30" HIOS pipeline in Block A-283 all in the High Island Area, East Addition, South Extension, Gulf of Mexico.

In accordance with applicable regulations, the applicant agrees it will mail to each lessee or right-of-way holder whose lease or right-of-way is affected by this application, by registered mail, return receipt requested, a copy of the application and the maps attached hereto. A list of such lessees and right-of-way holders is attached and copies of the return receipts showing service upon such lessees and right-of-way holders will be forwarded to your office when received.

As set forth in the February 13, 1978 guidelines, and as amended the applicant agrees to the following:

1. The pipeline will be buried a minimum of three (3) feet below the mud line because the water depths do not exceed two hundred (200) feet.

2. The proposed pipeline will cross no existing pipeline.

3. All valves and fittings on the submerged pipeline will be buried to a minimum of one (1) foot below the mud line.

4. Sensing devices and fail close valves will be installed as shown on the enclosed Schematic Drawing 21-2022/DI-A-002.

5. Two (2) copies of a Block Survey Report prepared for Transco are enclosed.

6. All changes, additions or deletions to any equipment on the pipeline will be made only after first securing the expressed written approval of your office.

7. Your office will be notified at least five (5) days prior to commencing construction and will be advised of construction date, approximate starting time, starting point, name of contractor and barge, availability of heliport facilities and approximate completion date.

8. Your office will be notified forty eight (48) hours in advance of the hydrostatic test and will be advised of the location of the pressure recorder and approximate starting time of the test. Hydrostatic test data, including procedure, hold time and results will be furnished to your office within ninety (90) days following the test.

9. Within ninety (90) days after completion of construction, applicant will provide an as-built map establishing the location of the completed pipeline within an accuracy of +/- 100 feet, prepared in accordance with the requirements for the map depicting the proposed route reflecting the total length of the line (all in feet) and depicting those points, if any, at which the pipeline is located outside of the right of way.

10. Any break, leak, failure or accident will be reported within twelve (12) hours after such occurrence as provided for in said guidelines.

11. This application (and any amendments made hereto) is made with our full knowledge and concurrence with the OCS Lands Act (43 U.S.C. 1331 et seq.), as amended (P.L. 95-372), including the following: Sec. 5(e) addressing pipeline rights-of-way, Requirements of the Federal Energy Regulatory Commission notice of hearing, transportation and purchase of oil and gas without discrimination; Sec. 5(f)(1) addressing operation of pipelines in accordance with competitive principles, including open and nondiscriminatory access to both owner and non-owner shippers; Sec. 5(f)(2) which may allow exemption of the

requirements in Sec. 5(f)(1); and Sec. 21(b), addressing the assuring of maximum environmental protection, including the safest practices for pipeline burial.

Additionally, we expressly agree that if any site, structure, or object of historical or archaeological significance should be discovered during the conduct of any operations within the permitted right-of-way, we shall report immediately such findings to the Manager, New Orleans OCS Office, and make every reasonable effort to preserve and protect the cultural resource from damage until the Manager, New Orleans OCS Office, has given directions as to its preservation.

Additional design criteria data is as follows:

1. The length of the 10" pipeline between the riser and the proposed underwater tap valve is 2,896 feet or 0.55 miles.

2. The line pipe will be:

   10.750" O.D. x .365" W.T., API 5LX Gr. x-42, 40.48 lbs/ft.
   10.750" O.D. x .438" W.T., API 5LX Gr. x-42, 48.19 lbs/ft.
   10.750" O.D. x .500" W.T., ASTM A-106 Gr. B, 54.74 lbs/ft.

3. The riser piping at the platforms will be:

   10.750" O.D. x .500" W.T., ASTM A-106 Gr. B, 54.74 lbs/ft.

4. The products to be transported by the pipeline are natural gas and condensate.

5. The water depth is approximately 183 feet in Blocks A-283 and A-284, High Island Area, East Addition, South Extension.

6. The cathodic protection system will be Galvalum III bracelet anodes, as described on Dwg. 21-2020/DI-A-001, Sheet 4 of 4.

7. The products to be transported are natural gas and condensate, neither of which is corrosive to carbon steel pipe interior. However, the analysis of the transported product will be monitored and preventive measures such as pigging and/or inhibiting will be employed as necessary.

8. Protective coatings used on the underwater line pipe are:

   10" x .365" W.T., 1" thick - 140 PCF concrete, 1/2" mastic
   10" x .438" W.T., 1" thick - 140 PCF concrete, 1/2" mastic
   10" x .500" W.T., 1" thick - 140 PCF concrete, 1/2" mastic

9. The bulk specific gravity of the empty pipe in seawater is:

Pipe Size	Specific Gravity
10.750" x .365"	1.45
10.750" x .438"	1.57
10.750" x .500"	1.67

10. The anticipated specific gravity of the natural gas is 0.60 and the condensate is 0.75.

11. The design working pressure of the pipeline is as follows:

Maximum Allowable Operating Pressure based on valves and flanges will be 1,440 psig (maximum working pressure of ANSI 600# valves and flanges).

Maximum Allowable Operating Pressure based on line pipe will be:

$$MAOP = \frac{2\ St}{D} \times F \times E \times T$$

$$MAOP = \frac{2(35{,}000) \times .365}{10.750} \times .72 \times 1.0 \times 1.0 = 2{,}053$$

$$MAOP = \frac{2(42{,}000) \times .438}{10.750} \times .72 \times 1.0 \times 1.0 - 2{,}464$$

$$MAOP = \frac{2(35{,}000) \times .500}{10.750} \times .72 \times 1.0 \times 1.0 \times = 2{,}344 \text{ psig}$$

Maximum Allowable Operating Pressure based on the riser piping will be:

$$MAOP = \frac{2(35{,}000) \times .500}{10.750} \times 0.5 \times 1.0 \times 1.0 = 1{,}628 \text{ psig}$$

Therefore, the Maximum Allowable Operating Pressure of the system is limited to a maximum allowable pressure of 1,440 psig, based on valves and flange ratings.

12. The anticipated operating pressures are estimated to range from 750 psig to 1,200 psig.

13. The design capacity of the line is 30 MMCFD based on an inlet pressure of 1,002 psig and an outlet pressure of 1,000 psig.

14. The pipeline will be hydrostatically tested to a minimum pressure of 2,624 psig not exceeding a maximum pressure of 2,681 psig and held for 8 hours. The riser piping will be hydrostatically tested to a mimimum pressure of 2,995 psig not exceeding a maximum pressure of 3,060 psig and held for 4 hours.

    The ANSI 600# and 900# valves, flanges and fittings will not be subjected to a body test pressure greater that 2,175 and 3,250 psig, respectively.

15. The design pipe depth is shown on Drawing No. 21-2020/DI-A-001, Sheet 2 of 4 sheets.

16. The platform risers below water will be coated with 3 mils (dry) of inorganic zinc-rich primer and then flake glass filled epoxy phenolic for a total dry film thickness of 24 to 40 mils.

    The piping above-water will be coated with 3 mils (dry) inorganic zinc-rich primer and then Hi-Build catalyzed epoxy for a total dry film thickness of 15 mils.

17. All piping, fittings, risers and components of the pipeline are designed in compliance with 49 CFR 192.

18. Construction information:

Estimated Starting Date	July 1, 1980
Method of Construction	Lay Barge
Method of Burial	Jet Bury Barge
Estimated time required to lay and bury pipe	2 weeks
Estimated time to complete project	4 weeks

19. Company Contact:
    Paul E. Newton, Supervising Engineer, Permits
    Transcontinental Gas Pipe Line Corporation
    P. O. Box 1396
    Houston, Texas 77001
    Telephone (713) 871-2533

Enclosed are three copies each of the maps and drawings referred to above, prepared and certified in accordance with applicable guidelines. Also enclosed is an engineering data attachment of three pages.

A certified copy of the articles of incorporation and certificate of the Assistant Secretary, under seal, certifying that the corporate officer executing the application has the authority to do so have already been submitted to your office. These documents have been placed on record in a file identified as New Orleans Miscellaneous File No. 011. A filing fee of $100.00, together with the first year's rental of $15.00 computed on 0.55 miles of right-of-way, is enclosed.

Also enclosed please find a Nondiscrimination in Employment statement executed by a Vice President of Transcontinental Gas Pipe Line Corporation.

If the above and attached information meets with your approval, we would appreciate your issuing the necessary right-of-way at your earliest convenience. Inquiries concerning this application may be directed to the applicant at P. O. Box 1396, Houston, Texas 77001.

Very truly yours,

TRANSCONTINENTAL GAS PIPE LINE
CORPORATION

By _____
Vice President

Enclosures

LESSEES AND RIGHT-OF-WAY HOLDERS

HIGH ISLAND AREA,
EAST ADDITION,
SOUTH EXTENSION

Block A-283	Oil & Gas OCS-G 2404	KOCH Industries, Inc. General American Oil Company of Texas TransOcean Oil, Inc. Gulf Oil Corporation Unidel Oil Corporation
	Pipeline OCS-G 3302	High Island Offshore System
Block A-284	Oil & Gas OCS-G 3951	Transco Exploration Company Energy Development Corporation
	Pipeline OCS-G 3302	High Island Offshore System

NOTE: This form must be executed as an original.

UNITED STATES
DEPARTMENT OF THE INTERIOR
BUREAU OF LAND MANAGEMENT

NONDISCRIMINATION IN EMPLOYMENT

As a condition precedent to the approval of the granting of the subject pipeline right-of-way, the grantee Transcontinental Gas Pipe Line Corporation hereby agrees and consents to the following stipulation which is to be incorporated into the application for said right-of-way.

During the performance of this grant the grantee agrees as follows:

> During the performance under this grant, the grantee shall fully comply with paragraphs (1) through (7) of section 202 of Executive Order 11246, as amended, (reprinted in 41 CFR 60-1.4 (a)), which are for the purpose of preventing discrimination against persons on the basis of race, color, religion, sex or national origin. Paragraphs (1) through (7) of section 202 of Executive Order 11246, as amended, are incorporated in this grant by reference.

Transcontinental Gas Pipe Line
Corporation

Signature of Grantee
Vice President

Date: March 10, 1980

ENGINEERING DATA
HIGH ISLAND AREA BLOCK A-284, 10" PIPELINE

1. The pipeline will be buried to a minimum depth of 3 feet since the water depth does not exceed 200 feet at any point.

2. The proposed pipeline will cross no existing pipelines.

3. All valves and fittings on the submerged component will be buried to a minimum of one foot below the mudline.

4. The length of the line between the riser and proposed underwater tap valve is 2,896 feet or 0.55 mile.

5. The line pipe will be:

   10.750" O.D. x .365" W.T., API 5LX Gr. x-42, 40.48 lbs/ft.

   10.750" O.D. x .438" W.T., API 5LX Gr. x-42, 48.19 lbs/ft.

   10.750" O.D. x .500" W.T., ASTM A-106 Gr. B, 54,74 lbs/ft.

6. The riser piping at the platform will be:

   10.750" O.D. x .500" W.T., ASTM A-106 Gr. B, 54.74 lbs/ft.

7. The water depth is about 183 feet throughout the length of the pipeline in Blocks A-283 and A-284 High Island Area.

8. The cathodic protection system will be Galvalum III bracelet anodes, as described on Drawing 21-2020/DI-A-001, Sheet 4 of 4.

9. The products to be transported by the pipeline are natural gas and condensate, neither of which is corrosive to carbon steel pipe interior. However, the analysis of the transported product will be monitored and preventive measures such as pigging and/or inhibiting will be employed as necessary.

10. Protective coatings used on the underwater line pipe are:

    10" x .365" W.T., 1" - 140 PCF concrete, 1/2" mastic

    10" x .438" W.T., 1" - 140 PCF concrete, 1/2" mastic

    10" x .500" W.T., 1" - 140 PCF concrete, 1/2" mastic

11. The bulk specific gravity of the empty pipe in seawater is:

PIPE SIZE	S.G.
10.750" x .365"	1.45
10.750" x .438"	1.57
10.750" x .500"	1.67

12. The anticipated specific gravity of the natural gas is 0.60 and the condensate is 0.75.

13. The design working pressure of the system is as follows:

Maximum Allowable Operating Pressure based on valves and flanges will be 1440 psig (maximum working pressure of ANSI 600 valves and flanges).

Maximum Allowable Operation Pressure based on line pipe will be:

$$MAOP = \frac{2\ St}{D} \times F \times E \times T$$

$$MAOP = \frac{2(42{,}000) \times .365}{10.750} \times .72 \times 1.0 \times 1.0 = \underline{2053} \text{ psig}$$

$$MAOP = \frac{2(42{,}000) \times .438}{10.750} \times .72 \times 1.0 \times 1.0 = \underline{2464} \text{ psig}$$

$$MAOP = \frac{2(35{,}000) \times .500}{10.750} \times .72 \times 1.0 \times 1.0 = \underline{2344} \text{ psig}$$

Maximum Allowable Operating Pressure based on the riser piping will be:

$$MAOP = \frac{2(35{,}000) \times .500}{10.750} \times 0.5 \times 1.0 \times 1.0 = \underline{1628} \text{ psig}$$

Therefore, the Maximum Allowable Operating Pressure of the pipeline is <u>1440 psig</u> based on the valves and flanges.

14. The anticipated operating pressures are estimated to range from 750 psig to 1200 psig.

15. The design capacity of the line is 30 MMCFD based on inlet pressure of 1002 psig and outlet pressure of 1000 psig.

16. The hydrostatic test pressure and hold time for the pipeline will be 2624 to 2681 psig for 8 hours. The riser will be hydrostatically tested at 2995 to 3060 psig for 4 hours.

The ANSI 600 and 900 valves, flanges and fittings will not be subjected to a body test greater than 2175 and 3250 psig, respectively.

17. The design burial depth is shown on Drawing 21-2020/DI-A-001, Sheet 2 of 4.

18. The platform riser below water will be coated with 3 mils (dry) of inorganic zinc-rich primer, and then flake glass-filled epoxy phenolic for a total dry film thickness of 24 and 40 mils.

    The above water piping will be coated with 3 mils (dry) of inorganic zinc - rich primer and then Hi-Build catalyzed epoxy for a total dry film thickness of 15 mils.

19. All piping, fittings, riser and components of the pipeline are designed in compliance with 49 CFR 192.

20. Construction information:

A.	Estimated Starting Date:	July 1, 1980
B.	Method of Construction:	Lay Barge
C.	Method of Burial:	Jet Bury Barge
D.	Estimated Time Required to Lay and Bury Pipe:	2 weeks
E.	Estimated Time to Complete Project:	4 weeks

21. Company Contact:

    Paul E. Newton, Supervising Engineer, Permits
    Transcontinental Gas Pipe Line Corporation
    P.O. Box 1396 Houston, Texas 77001
    Telephone (713)871-2533

BEST AVAILABLE COPY

4305-12

RECEIVED

MAR 13 12 25 PM '80

BUR OF LAND MGMT
OUTER CONTINENTAL
SHELF OFFICE
NEW ORLEANS, LA.

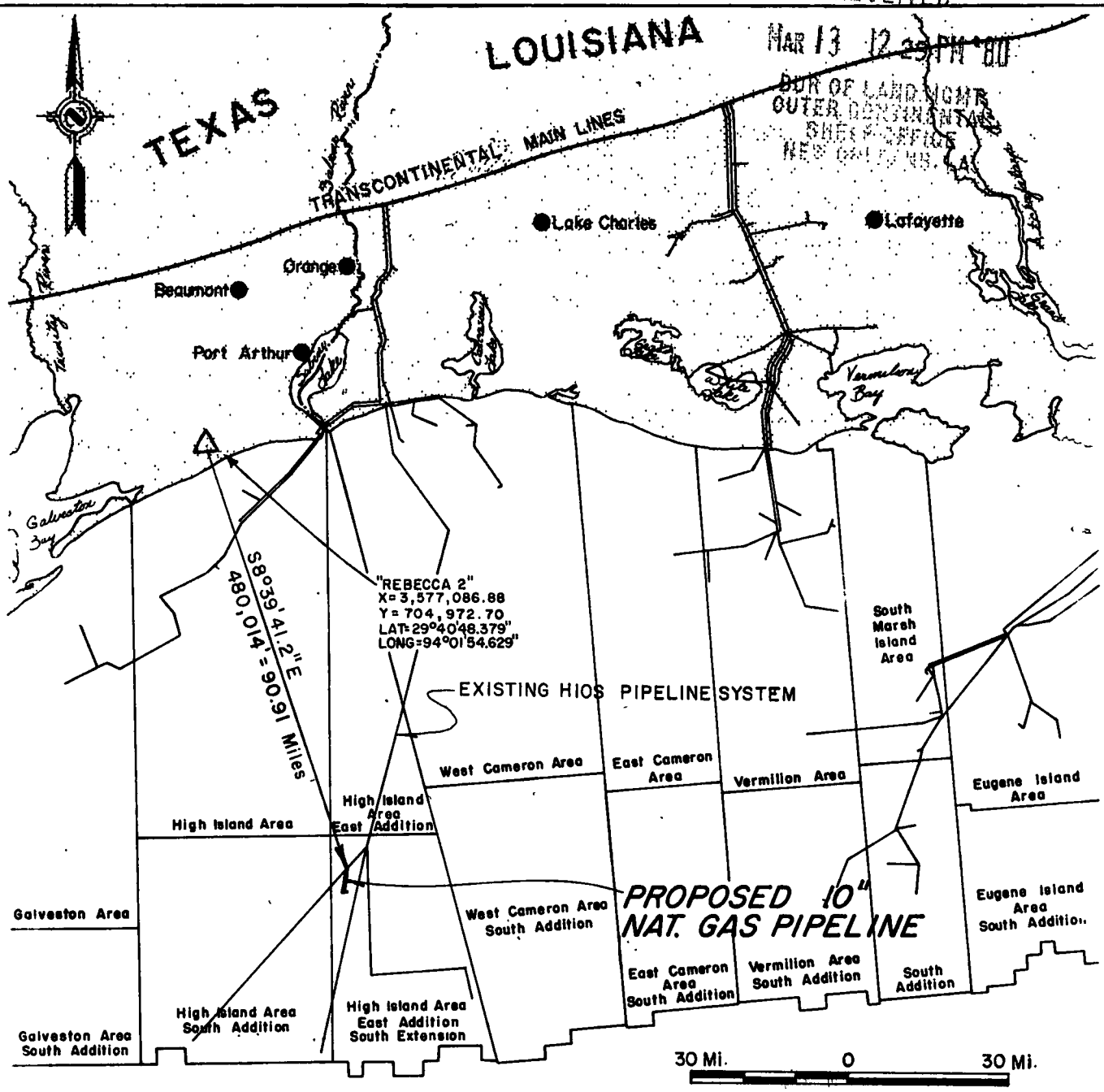

I hereby certify that the design of the Pipeline complies with Department of transportation Regulation Part 192, Title 49, and that this map accurately reflects the center line of the proposed Pipeline right-of-way.

RUSSELL J. JUDAH
18284
REGISTERED PROFESSIONAL ENGINEER

Date

Number

OCS-G 4305

Transcontinental Gas Pipe Line Corporation
A Subsidiary of Transco Companies Inc.

Engineering Department
Houston, Texas

PROPOSED NATURAL GAS PIPELINE
IN THE GULF OF MEXICO
HIGH ISLAND AREA BLK. A-283 TO A-284
OFFSHORE, TEXAS

Drawn By d. swan	Date 1-31-80	Approved By RoG	Date 2-4-80
Checked By TAW	Date 2-1-80	Henry W. Ingram	
Approved By Drafting S	Date 2-1-80	Approved By	Engineer
W. O. No. 5291.37	Scale Shown	General Group & Gun Number 21-2020	
	Sheet 1 of 4	Dwg. No. D1-A-001	

Revision | By | Date | No.

RECEIVED

BEST AVAILABLE COPY

4305-13

cy for drafting

MAR 13 12 29 PM '80
BUR OF LAND MGMT.
OUTER CONTINENTAL
SHELF OFFICE
NEW ORLEANS, LA.

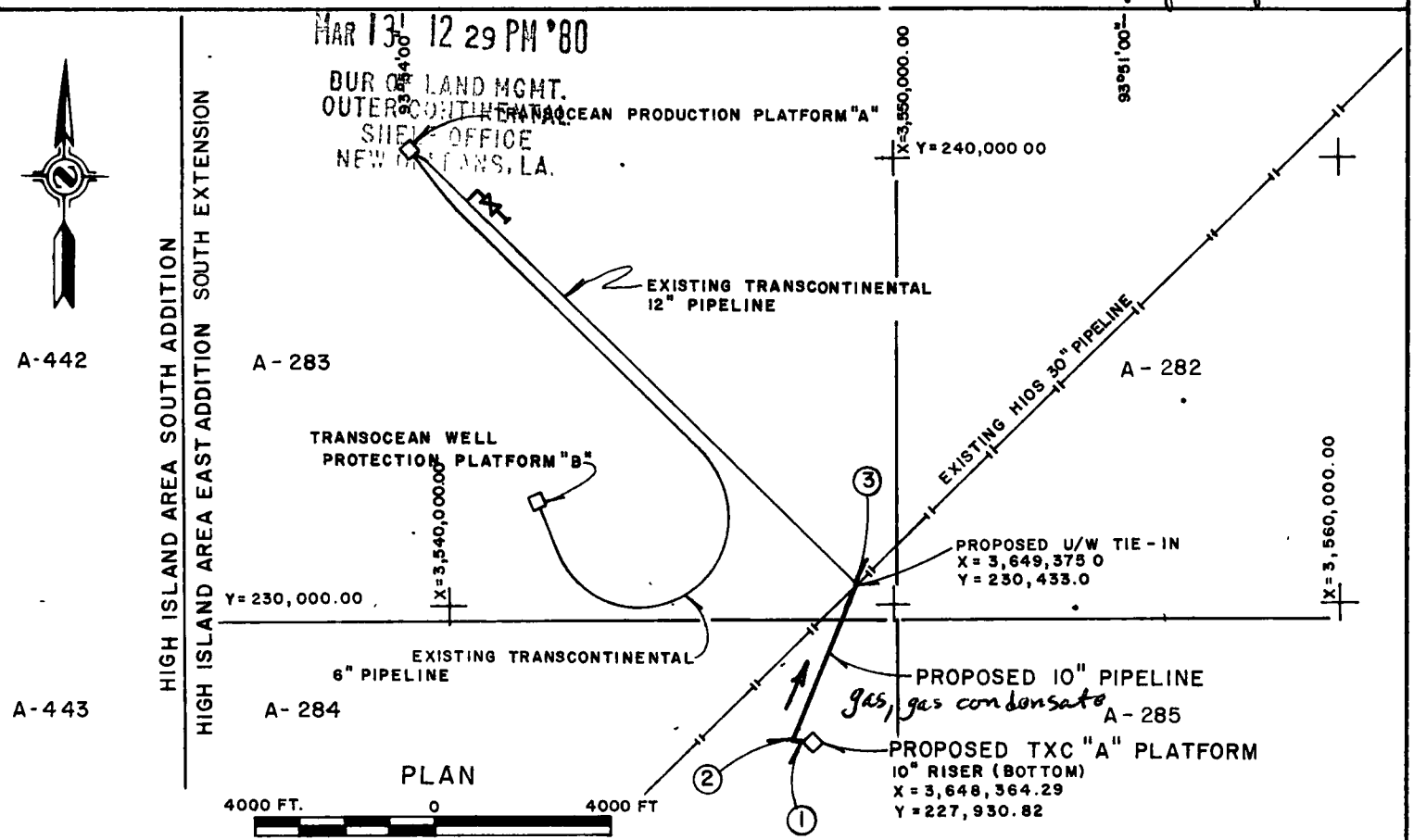

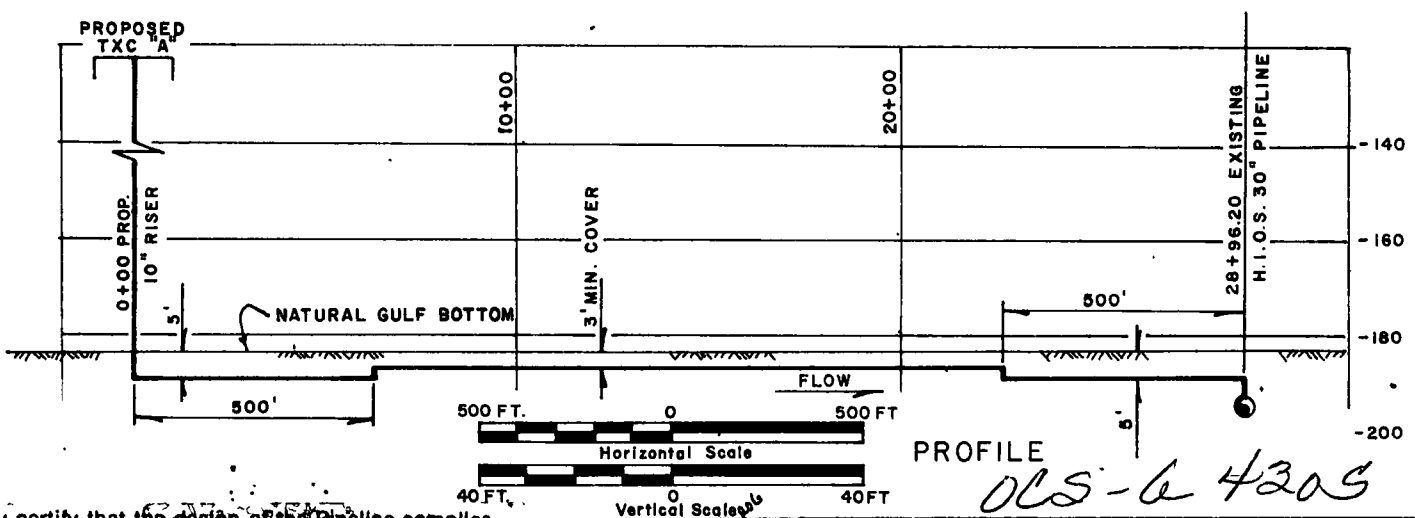

OCS-G 4205

I hereby certify that the design of the Pipeline complies with Department of Transportation Regulation Part 192, Title 49, and that this map accurately reflects the center line of the proposed Pipeline right-of-way.

RUSSELL J. JUDAH
18284
REGISTERED PROFESSIONAL ENGINEER

Date 2/11/80 — Number 18284

No.	Date	Revision	By
1	2/11/80	Corrected Valve Symbol	drs

Transcontinental Gas Pipe Line Corporation — Engineering Department, Houston Texas
A Subsidiary of Transco Companies Inc

PROPOSED NATURAL GAS PIPELINE
IN THE GULF OF MEXICO
HIGH ISLAND AREA BLK. A-283 TO A-284
OFFSHORE, TEXAS

Drawn By SWAN	Date 1-30-80	Approved By RGG	Date 2-4-80
Checked By JDW	Date 2-1-80	Approved By Henry W. Ingram, Engineer	
Approved By Drafting S	Date 2-1-80		
W. O. No. 5291.37	Scale Noted	General Group & Gun Number 21-2020	
	Sheet 2 of 4	Dwg. No. DI-A-001	

BEST AVAILABLE COPY

4305-14

Proposed 10" Pipeline From TXC Platform "A" To HIOS Tap Valve

Pt.	Bearing	Distance	Remarks	X	Y	Lat.	Long.
1			Bottom of Riser Platform "A"	3,648,364 29	227,930 82	28° 21' 38.943"	93° 52' 24.310"
1 - 2	N 85° 00' 00.0" W	150.00'	P.I	3,648,214.86	227,943.89	28° 21' 39 137"	93° 52' 25.975"
2 - 3	N 24° 59' 22.7" E	2,746.20'	HIOS Tap Valve	3,649,375 00	230,433.00	28° 22' 03.256"	93° 52' 11.780"
Total Length 2,896 20 Feet or 0.55 Miles							

RECEIVED
MAR 13 12 29 PM '80
BUR OF LAND MGMT.
OUTER CONTINENTAL
SHELF OFFICE
NEW ORLEANS, LA

NOTES:

1. THE PIPELINE WILL BE USED TO TRANSPORT NATURAL GAS FROM THE TEXAS O.C.S. TO THE CONTINENTAL UNITED STATES.
2. COORDINATES, BEARINGS, AND DISTANCES SHOWN ARE BASED ON TEXAS (LAMBERT) PLANE COORDINATE SYSTEM, SOUTH CENTRAL ZONE.
3. VERTICAL DATUM: LOCAL GULF LEVEL AT TIME OF SURVEY.
4. BOTTOM OF GULF PROFILE TAKEN FROM HAZARD SURVEY CHARTS.
5. PROPOSED PERMANENT R.O.W. 200 FEET IN WIDTH.

I hereby certify that the design of the Pipeline complies with Department of transportation Regulation Part 192, Title 49.

STATE OF TEXAS
RUSSELL J. JUDAH
18284
REGISTERED PROFESSIONAL ENGINEER

R. J. Judah

1 Feb 80 — 18284

Date — Number

OCS-G 4305

Transcontinental Gas Pipe Line Corporation Engineering Department Houston Texas

A Subsidiary of Transco Companies Inc

PROPOSED NATURAL GAS PIPELINE
IN THE GULF OF MEXICO
HIGH ISLAND AREA BLK. A-283 TO A-284
OFFSHORE, TEXAS

Drawn By SWAN	Date 1 30 80	Approved By RGG	Date 2-4-80
Checked By DW	Date 2-1-80	Approved By Engineer	
Approved By Drafting S	Date 2-1-80		
W. O. No.	Scale Noted	General Group & Gun Number 21-2020	
	Sheet 3 of 4	Dwg. No. D1-A-001	

By / Revision / Date / No.

BEST AVAILABLE COPY

4305-15

PROPOSED 10" PIPELINE FROM PLATFORM "A" TO HIOS TAP VALVE - BLK. A-283

GALVALUM III BRACELETS

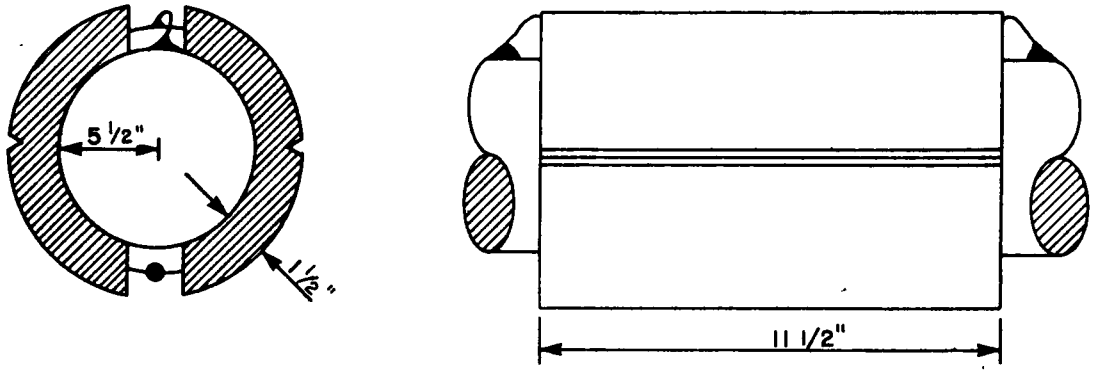

Weight. 64 Lbs.

Scale: N. T. S

NOTES:

1. Galvalum III Anodes Theoretical Rating = $\frac{0.1530 \text{ Amp. Year}}{\text{Lbs.}}$

   Practical = 0.1530 x 75% Effective x 85% use factor = $\frac{0.0975 \text{ Amp. Year}}{\text{Lbs.}}$

2. Assuming 2% Damaged Coating and .005 Amperes Per Square Foot Required for Protection.
   Current Required = CR
   CR = Total Area x 0.02 x 0.005
   = 8150.9 Sq. Ft. x 0.0001
   CR = 0.82 Amperes

3. Pounds of Galvalum III Required for 40 Years Protection:
   Lbs. = $\left(0.82 \text{ Amperes} / \frac{0.0975 \text{ Amp. Year}}{\text{Lb.}}\right) \times 40$ Years
   Lbs. = 334.40

4. 11.00" I.D. Galvalum III Anodes: 64 Lbs. Each.
   Number of Anodes Required = N.R.
   N.R. = 334.40 / 64
   N.R. = 5.22

5. 6-11.00" I.D. Galvalum III Anodes, On 480 Foot Spacing Will Be Installed. The First Anode On The Pipeline Will Be 100 Feet From Platform "A". There Will Be 2 Anodes Placed At The Base Of The Riser Assembly and 1 Anode Placed on U/W Tap Valve Assembly.

6. Pipeline To Environment Voltages Will Be Observed At The Platform After The Line Is In Place To Assure That Adequate Corrosion Protection Is Being Provided.

7. Total Number Anodes Required = 9.

RECEIVED
MAR 13 12 29 PM '80
BUR. OF LAND MGMT.
OUTER CONTINENTAL
SHELF OFFICE
NEW ORLEANS, LA.

OCS-G 4305

I hereby certify that the design of the Pipeline complies with Department of transportation Regulation Part 192, Title 49.

18284

Date

Number

Transcontinental Gas Pipe Line Corporation Engineering Department Houston, Texas

A Subsidiary of Transco Companies Inc.

PROPOSED NATURAL GAS PIPELINE
IN THE GULF OF MEXICO
HIGH ISLAND AREA BLK. A-283 TO A-284
OFFSHORE, TEXAS

Drawn By SWON	Date 1-31-80	Approved By RoG	Date 2-4-80
Checked By	Date 2-1-80		
Approved By Drafting S	Date 2-1-80	Approved By	Engineer
W. O. No. 5291.37	Scale None	General Group & Gun Number	21-2020
	Sheet 4 of 4	Dwg. No.	DI-A-001

By / Revision / Date / No.

BEST AVAILABLE COPY

4305-16

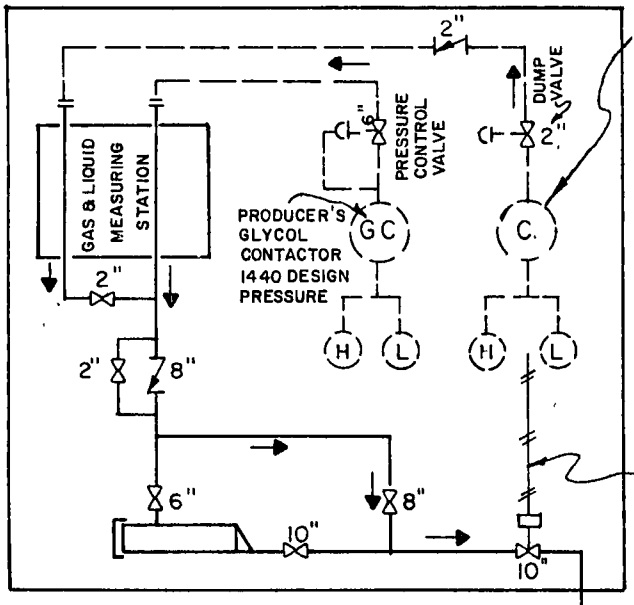

Hi-Set at 1440 PSIG Maximum
Lo-Set at 500 PSIG Minimum

TXC PLATFORM "A"
BLOCK A-284
HIGH ISLAND AREA

LENGTH	PIPE
1,295'	10.750" O.D. x .500" W.T.; A.P.T.M. A106 Gr. B
400'	10.750" OD x .438" W.T., A.P.I 5LX Gr. X-42
1,201	10 750" O D.x .365" W.T., A P.I. 5LX Gr X-42
2,896	

Connection To Producer's Automatic & Remote ESD System

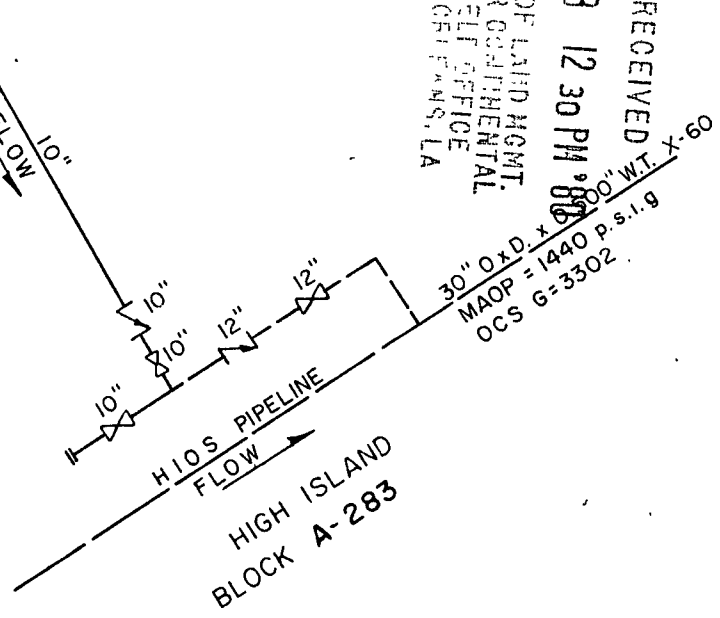

NOTES:

1. System MAOP = 1440 p.s.i.g.
2. ALL Underwater Valves are ANSI 900
3. Pipeline is Cathodically protected with Sacrificial Anodes
4. ALL Platform Valves are ANSI 600

I hereby certify that the design of the Pipeline complies with Department of Transportion Regulation Part 192, Title 49,

STATE OF TEXAS
P. J. PRUESMEYER
REGISTERED PROFESSIONAL ENGINEER

P. J. Pruesmeyer
ENGINEER

2-25-80
DATE

9001
NUMBER

OCS-G 4305

Transcontinental Gas Pipe Line Corporation Engineering Department Houston, Texas
A Subsidiary of Transco Companies Inc

SCHEMATIC FLOW DIAGRAM
PROPOSED 10" PIPELINE FROM BLOCK A-284
TO BLOCK A-283 HIGH ISLAND AREA
OFFSHORE TEXAS

Drawn By E. E.	Date 2-12-80	Approved By DLC	Date 2-25-80
Checked By S	Date 2-14-80	Paul J. Pruesmeyer	
Approved By Drafting CWW	Date 2-14-80	Approved By Engineer	
W. O. No. 5291.37	Scale None	General Group & Gun Number 21-2022	
	Sheet 1 of 1	Dwg. No. D1-A-002	

Revision | By | Date | No.

4305

OCS-G 4305

"ENGINEERING CHECK LIST"

ENGINEER WILL VERIFY THE FOLLOWING:

✓ A. The safety schematic is complete and depicts adequate engineering design.

✓ B. The design information submitted in the application or on the data sheet is complete and acceptable.

✓ C. The pipeline is buried in areas requiring burial.

N/A D. All pipeline crossings are designed properly and buried in areas requiring burial.

✓ E. The application is forwarded to the U. S. Geological Survey.

✓ F. Geological Survey completes technical review.

✓ G. Geological Survey's technical review agrees with engineering review.

"I have reviewed the proposed pipeline right-of-way application and have verified that it is designed in compliance with federal regulations. It meets the minimum standards of safety as established by the Department of Transportation and the Department of the Interior."

Aubry Brittow 5-14-80
(Signature of Engineer)

"AS-BUILT" Checked in RED

PIPELINE RIGHT-OF-WAY APPLICATION "ENGINEERING CHECK LIST"
Bureau of Land Management
New Orleans OCS Office

Date: 3-17-80

OCS-G 4305

A. Description of pipeline and location of proposed route (i.e., size of pipe; product to be transported; from where to where; platform number; name; block number; area and distance in feet and miles): for a 10.75 inch Natural Gas and Condensate pipeline from Nasco Exploration Company "A" Platform in Block A-284 to subsea tie with HIOS 30" Pipeline in Block A-283 all located in High Island Area East Add, S. Ext. for a total length of ~~2,896.20~~ 2,784.81' or ~~.55~~ .53 miles.

B. Safety Flow Schematic - Verify that the information shown on the safety flow schematic diagram contains the following:

✓ 1. Pressure source is drawn into the schematic with the following:

a. source (i.e., name) Coalescer & Glycol Contactor

b. design working pressure 1,440 PSig

c. hi-lo pressure sensor settings 1440 psig

✓ 2. "ANSI" ratings of all valves, flanges and fittings between the source and the connecting pipeline are shown.

✓ 3. Pressure relief valves, where applicable, are shown with the setting set no higher than the maximum allowable working pressure (MAWP) of the vessel.

N/A 4. If the maximum input source pressure is greater than the maximum allowable operating pressure (MAOP) of the pipeline, redundant safety equipment is required.

✓ 5. MAOP of proposed pipeline does not exceed MAOP of connecting pipeline.

✓ 6. The pipeline leaving the platform receiving production from the platform is equipped with high-low pressure sensors to directly or indirectly shut-in the well or wells on the platform.

N/A 7. The pipeline delivering production to the production facilities on the platform is equipped with an automatic fail-close valve tied into the automatic and remote shut-in system.

✓ 8. The pipeline crossing the platform which does not deliver production to the platform, but which may or may not receive production from the platform, is equipped with high and low pressure sensors connected to an automatic fail-close valve located in the upstream portion of the pipeline at the platform. In addition, the sensors are tied into either the platform's automatic and remote shut-in system or an independent remote shut-in system.

✓ 9. The pipeline boarding the platform/pipeline is equipped with a check valve.

✓ 10. The pipeline leaving the platform is equipped with a check valve.

✓ 11. The high-low pressure sensors on departing pipeline located upstream of the check valve.

✓ 12. Where applicable, high-low sensors located downstream of the back pressure regulator.

✓ 13. If there is liquid injection into the line, are pumps associated with the injection? (Yes or no) No.

✓ 14. Direction of flow indicated.

✓ 15. Pipe specifications (i.e., size, grade, weight and wall thickness).

✓ 16. Total length of proposed pipeline (feet and miles).

✓ 17. MAOP of connecting pipeline. (OCS-G 3302) 1440 psig.

✓ 18. Statement that design meets or exceeds DOT Regulations 192 or 195, as applicable, registered engineer's seal, registration number, date and signature.

✓ 19. Area and block number of proposed pipeline/platform.

✓ 20. Cathodic protection specifications.

C. Design Information - Verify that the pipeline design information given in the application and/or on the data sheet is complete and correct:

✓ 1. Product to be transported: Natural Gas and Condensate

✓ 2. Pipeline, riser and subsea valve assembly specifications:

a. Pipeline:

(1) Size 10.75" Wall Thickness .365" Grade X-42 Weight 40.48 lbs/ft

(2) Size 10.75" Wall Thickness .438" Grade X-42 Weight 48.19 lbs/ft.

(3) Size 10.75" Wall Thickness .500" Grade "B" Weight 54.74 lbs/ft.

b. Riser:

(1) Size 10.75" Wall Thickness .500" Grade "B" Weight 54.74 lbs/ft.

(2) Size _____ Wall Thickness _____ Grade _____ Weight _____

c. Subsea valve assembly:

(1) Size _____ Wall Thickness _____ Grade _____ Weight _____

(2) Size _____ Wall Thickness _____ Grade _____ Weight _____

✓ 3. Water depth: Maximum -183' Minimum -183'

✓ 4. Type of corrosion protection:

___ a. Impressed current system

✓ b. Sacrificial anode system

(1) Type of anode Galvalum III

(2) Spacing interval 480'

(3) Weight of unit anode given by applicant 64 lbs

N/A c. If platform anodes are used, are they considered adequate?

Yes _____ No _____

✓ d. If pipeline anodes are used:

Formula: $LE_{p/l} = 3.82 \times 10^4 \times W^0/DIR$ = 38300 x 64/10.75 x 480 x 7.6 = 62 yrs

Does the calculated life expectancy equal or exceed 20 years?

Yes ✓ No _____

✓ 5. Description of protective coating:

a. Pipeline Mastic & Concrete

b. Riser Zinc Primer & Epoxy

c. Subsea valve assembly _____

✓ 6. Description of weighted coating:

a. Pre-concrete coating Mastic

b. Density of concrete 140 PCF

c. Thickness of concrete 1"

d. Thickness of asphalt 1/2"

✓ 7. Calculate the specific gravity using one of the following formulae:

____a. For epoxy coating: $SG = 2.865W/D^2$

____b. Density comparison with fluid material: $SG = \frac{W+P}{\frac{A}{R}}$

✓ c. Lines with a specific thickness of concrete:

$$SG = \frac{RC}{R} + \frac{K_2}{(T-K_1)^2}\left(\frac{W+P}{K_3} - \frac{RC}{R}\right) = \begin{matrix} ① = 1.45 \\ ② = 1.56 \\ ③ = 1.66 \end{matrix}$$

see Attachment

____d. Lines having two coatings of enamel and a felt wrap, or only asphaltmastic coating:

$$SG = \frac{W+P}{K_3}$$

Where: SG = specific gravity
RC = density of concrete (lb/cu. ft.)
K_1, K_2, K_3 = coefficients
T = thickness of concrete coating (inches)
W = weight of bare pipe (lb/ft)
P = weight of coating
R = density of fluid material (lb/cu. ft.); i.e., sea water = 64 lbs/cu. ft.
D = diameter of pipe (inches)
A = Cross-sectional area

✓ 8. Given specific gravity

a. 1.45 b. 1.57 c. 1.67

✓ 9. Gravity or density of product .60 + .75 (Condensate)

✓ 10. Design capacity of pipeline 30 MM CFD

✓ 11. Given Hydrostatic Test Pressure: Line Pipe ~~2681~~ 2674 psig ✓ Hold Time 8 ✓ hrs.

Riser ~~3060~~ 2995 psig Hold Time 4 hrs.

Recommended maximum hydrostatic body test for ANSI valves, flanges, and fittings are as follows:

ANSI 300	---	1,100 psig
ANSI 400	---	1,450 psig
ANSI 600	---	2,175 psig
ANSI 900	---	3,250 psig
ANSI 1,500	---	5,400 psig

Note: Minimum hold times gas pipeline:

Line Pipe = 8 hrs.
Riser = 4 hrs.
Liquid Line = 24 hrs.

12. Maximum Allowable Operating Pressure (MAOP) of line pipe:

MAOP = $\frac{2\ st}{D}$ x F x E x T Note: F = .72

a. MAOP = $\frac{2 \times 42{,}000 \times .365}{10.75} \times .72 \times 1 \times 1 = 2{,}054$ psig

b. MAOP = $\frac{2 \times 42{,}000 \times .438}{10.75} \times .72 \times 1 \times 1 = 2{,}464$ psig

c. MAOP = $\frac{2 \times 35{,}000 \times .500}{10.75} \times .72 \times 1 \times 1 = 2{,}344$ psig

13. Maximum Allowable Operating Pressure (MAOP) of riser pipe.

Note: F = .50 for risers on natural gas transmission lines.
Note: F = .60 for risers on oil pipelines.

a. MAOP = $\frac{2 \times 35{,}000 \times .500}{10.75} \times .60 \times 1 \times 1 = 1{,}954$ psig
$\times .50 \times 1 \times 1 = 1{,}628$ psig

b. MAOP =

14. Maximum Allowable Operating Pressure of flanges, fittings and valves:

= 2.4 x ANSI rating = $2.4 \times 600 = 1{,}440$ psig

15. Maximum Allowable Operating Pressure (MAOP) of proposed pipeline as determined in accordance with Title 49 CFR Part 195 or 192, as applicable, is 1,440 psig.

16. Items 12., 13., and 14. above are equal to or more than the MAWP of source.

17. Verify: 1.25(MSP) ≤ HTP ≤ .95 (smaller IP @ SMYS of item 12. or 13. above)

1800 ≤ 2624 to 2681 ≤ 2709 ≤

Note: The recommended limit of test as a percentage of internal pressure @ minimum yield strength is equal to 95%:

IP @ SMYS = $\frac{2 \times s \times t}{D}$ = 2852

✓ 18. Verify MAOP does not exceed the lowest of the following:

a. Submerged components: HTP/1.25 = 1,728 psig

b. For riser: HTP/1.5 = 1,440 psig

✓ 19. Valve guards used: Yes ____ No ✓

D. Burial Requirements: Verify the pipeline is buried in area requiring burial.

✓ 1. Minimum three (3) feet below mud line to 200 ft. contour.

✓ 2. Minimum of one (1) foot below mud line for all valves and taps.

E. Pipeline Crossings:

N/A 1. Verify there is a minimum separation of 18 inches between the two lines.

N/A 2. Cement bags placed two (2) feet horizontally on each side of proposed pipeline.

N/A 3. Crossings in water depths exceeding 200 feet:

____ a. Cement bags placed on a slope not to exceed one (1) foot vertical and two (2) feet horizontal.

F. Construction Information:

✓ 1. Proposed construction commences date July 1, 1980

✓ 2. Method of construction Lay Barge

✓ 3. Method of burial Jet Burry Barge

✓ 4. Time required to lay pipe 2 weeks

✓ 5. Time required to complete project 4 weeks

G. Applicant complies with current OCS pipeline guidelines:

Yes ✓ No ____

H. Applicant agrees to forward "as-built" drawings and hydrostatic test data within ninety (90) days after completion:

Yes ✓ No ____

3-17-80

OCS-G 4305

C.7.c.

$$SG = \frac{RC}{R} + \frac{K_2}{(T-K_1)^2}\left(\frac{W+P}{K_3} - \frac{RC}{R}\right)$$

① $$SG = \frac{140}{64} + \frac{34.52}{(1+5.83)^2}\left(\frac{40.48+16.57}{48.19} - \frac{140}{64}\right)$$

$$= 2.1875 + \frac{34.52}{(6.83)^2}\left(\frac{57.05}{48.19} - 2.1875\right)$$

$$= 2.1875 + .7400 \quad (1.1839 - 2.1875)$$

$$= 2.1875 - .7427$$

$$\underline{SG = 1.45}$$

② $$SG = 2.1875 + .7400\left(\frac{48.19+16.57}{48.19} - 2.1875\right)$$

$$= 2.1875 + .7400\,(1.3438 - 2.1875)$$

$$= 2.1875 - .6243$$

$$\underline{SG = 1.56}$$

③ $$SG = 2.1875 + .7400\left(\frac{54.74+16.57}{48.19} - 2.1875\right)$$

$$= 2.1875 + .7400\,(1.4798 - 2.1875)$$

$$= 2.1875 - .5237$$

$$\underline{SG = 1.66}$$

43051

BEST AVAILABLE COPY

Revised 1/15/80

PIPELINE APPLICATION CHECK LIST

INSTRUCTIONS: Check the blank on the left if the statement is affirmative or correct data submitted. Make N/A (not applicable) where appropriate. Place an X in the blank if the answer is no or if the data was not submitted. All blanks marked X must be rectified to a check (or qualified) before approval can be given for the pipeline. Enter data in the blanks furnished.

G2404 HI 283
G 3951 A. HI 284 Verify the following general information: ★ HOUSEIN HEKMATODOOST 282 HOSSEIN NICK 287

I. SOP ~~HI~~ NO, G2404, G 3951

✓ a. Do the leases involved on the P/L application appear on the current Suspension of Production (SOP) Lease List?

II. POD

____ a. Is the pipeline presently covered by an approved Plan of Development (POD)?

III. Lease Stipulation Yes _____ No _____
If yes, does lease require an archaeological survey? Yes _____ No _____

IV. USGS Application

____ a. The applicant is a Federal lease holder and the pipeline is to be used for such purposes as:

____ 1. Moving production to a control point for gathering, treating, storing, or measuring.

____ 2. Delivery of production to a point of sale.

____ 3. Delivery of production to a pipeline operated by a transportation company.

____ 4. Moving fluids in connection with lease operations, such as for injection purposes.

____ b. The pipeline is within the lease boundary owned by the operator.

____ c. Pipeline is within contiguous lease boundaries.

____ d. Pipeline is within noncontiguous lease boundaries. (Note: Items b, c, and d all fall under 30 CFR 250.18)

____ e. Lessee's "intent to cross" letters are received. (Wait 30 days for letters of objection. Only objections concerning interference with lease operations will be considered.)

____ f. Pursuant to Secretarial Order 2974 of April 30, 1975, check the following:

4305-2

_____ 1. FWS notified _____.

_____ 2. FWS comment received _____.

_____ 3. BLM notified _____.

_____ 4. BLM comment received _____.

_____ 5. Environmental Impact Evaluations completed _____.

_____ 6. If related to new POD/P, date of POD/P approval _____.

V. BLM Application

✓ a. The pipeline must not be a gathering line.

VI. DOT Pipelines

✓ a. The pipelines are shoreward of the outlet flange at the last process facility (If yes, include 49 CFR 192 for gas P/L or 49 CFR 195 for oil P/L in approval.)

VII. DOI Pipelines

N/A a. Pipelines not covered by VI above.

4305-3

BEST AVAILABLE COPY

B. Verify that the information shown on the safety equipment schematic drawing contains the following:

✓ I. The pipeline leaving the platform receiving production from the platform is equipped with high- and low-pressure sensors to directly or indirectly shut-in the well or wells on the platform.

N/A II. The pipeline delivering production to production facilities on the platform is equipped with automatic fail close valve tied into the automatic and remote shut-in system.

N/A III. The pipeline crossing the production platform which does not deliver production to the platform, but which may or may not receive production from the platform, is equipped with high- and low-pressure sensors connected to an automatic fail close valve located in the upstream portion of the pipeline at the platform. In addition, the sensors are tied into either the platform's automatic and remote shut-in system or an independent remote shut-in system.

✓ IV. The pipeline ~~boarding the platform~~ at the SSTI is equipped with a check valve.

✓ V. The pipeline leaving the platform is equipped with a check valve.

N/A VI. The pipeline pump is shown as well as its associated high- and low-pressure shut-in device.

✓ VII. If pipeline pilots are located on any pressure vessel or downstream of a departing check valve, all flow restriction(s), (backpressure valve(s), chokes), downstream of the process vessel, or wellhead, and upstream of check valve(s) must be indicated on the schematic.

If flow restriction(s) exist downstream of any process vessel a a low pressure sensor must be installed between the flow restriction(s) and the departing check valve(s). High-pressure sensor(s) must be installed downstream of the wellhead choke.

Reference API RP 14C, Pages 23 and 59

✓ VIII. Pressure source is drawn into the schematic with the following:

✓ a. Source 1440.

✓ b. Maximum source pressure, psig Glycol Contactor Coalescer.

✓ IX. The rated working pressures of all separators, pumps, compressors, valves, flanges, and fittings upstream of and including the boarding automatic fail close valve are shown.

ANSI 600 1440

4305-4

BEST AVAILABLE COPY

C. Verify that the location plat depicts the following:

✓ I. Location of pipeline

✓ II. Length of pipeline

✓ III. Size of pipeline

✓ IV. Type of service

✓ V. Direction of flow

✓ VI. X-Y coordinates of key ponts

D. Verify that the information given on the submitted data sheet is completed; and calculate the $MAOP_{sc}$, $MAOP_{rc}$, $MAOP_{p/l}$.

I. General information for calculating $MAOP_{sc}$, $MAOP_{rc}$, etc.

	3256	3422	2852
a. Size of pipeline, inches	10.75		
b. Weight of pipeline, lbs./ft.	54.74	48.19	40.48
c. Grade of pipeline	B	X42	X42
d. Wall thickness, inches	.5	.438	.365
e. Size of riser, inches	10.75		
f. Weight of riser, lbs./ft.	64.74		
g. Grade of riser	B		
h. Wall thickness of riser, inches	0.5		
i. Minimum WP rating of piping, fittings, valves, psig	1440		
j. Hydrostatic test pressure (HTP), psig	2624-2681		may 2995-3060
k. Hold time, hrs.	8hrs		4hrs

l. Classification of pipeline (oil or gas) _____

m. Type of pipe (ASTM A-106, API-5L, etc.) _____
NOTE: If ASTM A-53 Reference API RP 14E, Section 2.1.a(2)

II. DOI Pipelines

a. IP @ SMYS for submerged pipeline = $\frac{2st}{D}$ = 2852

b. (.72 x IP @ SMYS) for submerged pipeline = 2053 ($MAOP_{sc}$)

c. IP @ SMYS for riser = $\frac{2st}{D}$ = 3254

d. (.60 x IP @ SMYS) for riser = _____ ($MAOP_{rc}$)

e. See Ii above ($MAOP_{pfv}$) = _____ ($MAOP_{pfv}$)

_____f. Is 1.25 MSP $\leq$ HTP $\leq$ .95 (IP @ SMYS for smaller IP of a and c above)

_____ $\leq$ _____ $\leq$ _____

_____g. HTP/1.25 = _____

_____h. Is HTP hold time $\geq$ 2 hours

_____i. MAOP of receiving pipeline from IV _____.

_____j. $MAOP_{p/l}$ = the smallest of b, d, e, g, and i above

_____ ($MAOP_{p/l}$)

_____k. Test pressure ANSI & API carbon steel RTJ & RF Flanges and Valves

_____ (From Table 3.1, Page 31 API RP 14E)

_____l. Is K > HTP

NOTE: If note, add statement in approval letter to insure valves and flanges are note subjected to test pressure.

_____m. Is j $\geq$ MSP

_____ $\geq$ _____

If not, one of the following is necessary:

_____ 1. Redundant safety equipment is afforded.

_____ 2. A departure from the requirement for redundant safety equipment

III. DOT Pipelines

a. IP @ SMYS for submerged pipeline = $\frac{2st}{D}$ = 2852

b. (.72 x IP @ SMYS) for submerged pipeline = 2053 ($MAOP_{sc}$)

c. IP @ SMYS for riser = $\frac{2st}{D}$ = 3256

d. For oil P/L (.60 x IP @ SMYS) for riser = ~~3256~~ ($MAOP_{rc}$)

For gas P/L (.50 x IP @ SMYS) for riser = 1628

e. See Ii above 1440 ($MAOP_{pfv}$)

f. Limit of Testing

N/A ~~X~~ 1. For oil P/L

Is 1.25 MSP ≦ HTP ≦ .95 (IP @ SMYS for smaller IP of a and c above)

— ≦ — ≦ —

_____ 2. For gas P/L riser component:

Is 1.50 MSP = HTP of riser = .95 (IP @ SMYS of c above)

_____ ≦ ~~2624~~ 2995-3060 ≦ 3093

_____ 3. For gas P/L submerged component:

Is 1.25 MSP = HTP of submerged component = .95 (IP @ SMYS of a above

_____ ≦ 2624-2681 ≦ 2709

g. $MAOP_{p/l}$ based on HTP

1. For oil P/L HTP 1.25 = N/A

2. For gas P/L riser component HTP/1.5 = 1997 of riser

3. For gas P/L submerged component HTP/1.25 = 2099 of submerged component

4305-6

BEST AVAILABLE COPY

h. For oil P/L Is HTP hold time $\geq$ 24 hours N/A

For gas P/L Is HTP hold time $\geq$ 8 hours ✓

i. MAOP of receiving pipeline from IV _____

j. $MAOP_{p/l}$ = the smallest of b, d, e, g, and i above

_____ ($MAOP_{p/l}$)

k. Test pressure ANSI & API carbon steel RTJ & RF flanges and valves

2175 (From table 3.1, page 31 API RP 14E)

l. Is k > HTP NO

Insert

NOTE: If not, add statement in approval letter to insure valves and flanges are not subjected to test pressure.

m. Is j $\geq$ MSP

_____ $\geq$ _____

If not, one of the following is necessary:

_____ 1. Redundant safety equipment is afforded

_____ 2. A departure from the requirement for redundant safety equipment.

4305-7

IV. Pipeline Receiving Production (Installed Prior to July 31, 1977)

		Submerged Component	Riser
a.	Size, inches	30" HIOS	
b.	Grade		
c.	Wall thickness, inches		
d.	Minimum working pressure of valves and flanges	(MAOPpfv)	
e.	Date of last hydrostatic test		
f.	HTP, psig		
g.	Hold time, hrs.		
h.	MAOP based on HTP HTP/1.25		
i.	IP@SMYS for submerged P/L 2ST/D		
j.	(.72 x IP@SMYS) for submerged P/L	(MAOPsc)	
k.	IP@SMYS for riser 2ST/D		
l.	(.60 x IP@SMYS) for riser	(MAOPrc)	

m. If the receiving P/L is a DOT gas P/L and has not been tested since July 1, 1971, then what is the HAOP to which the segment was subjected during the 5 years prior to July 1, 1976? _____

n. MAOP of receiving P/L $\geq$ MAOP of proposed P/L $\geq$ MSP of proposed P/L

_____ $\geq$ _____ $\geq$ _____

*HAOP - Highest actual operating pressure

4305-8

E. Verify that the information was given on the submitted data sheet is complete; and calculate the life expectancy of the pipelines corrosion protection ($LE_{p/l}$)

I. General Information for Calculating $LE_{p/l}$

✓ a. Type of corrosion protection (platform anodes, P/L anodes, or rectifier

✓ b. If pipeline anodes are used:

1. Type of anode Galvalum III

2. Spacing interval, ft. 483

3. Weight of unit anode, lbs. 64

II. Calculate Life Expectancy of Corrosion Protection

N/A a. If platform anodes are used, annual pipe-to-electrolyte potential measurements are required.

✓ b. If pipeline anodes are used:

$LE_{p/l} = 3.82 \times 10^4 \times W^o/DIR? =$ 46 yrs

64

10.75 x 483 x 10.25

W^o = weight of one anode, pounds =

D = outside diameter of pipe, inches 10 3/4

2896/6 = 483

I = interval = length of pipe, feet ÷ total number of anodes

R = comsumption rate, lbs./amp-yr. 10.25

✓ c. Is our calculated $LE_{p/l}$ = 20 years.

If not, one of the following is necessary:

N/A 1. The company agrees to increase their cathodic protection to meet the 20-year requirement.

N/A 2. Annual pipe-to-electrolyte potential measurements will be required.

4305-9

F. Verify that the information given on the submitted data sheet is complete; and calculate the specific gravity on the pipeline ($SP_{p/l}$)

I. General Information pertaining to $SG_{p/l}$

a. Description of pipelines protective coating _____

b. Description of risers protective coating _____

c. Description of pre-concrete coating _____

d. Density of concrete, lbs./cu. ft. 140

e. Thickness of concrete, inches 1"

f. Thickness of asphalt/somastic 1/2

g. Gravity or density of products:

For gas 0.6 (air = 1.0)

For oil/condensate _____ ° API, 0.75 (water = 1.0)

h. Given $SG_{p/l}$ _____

.365 1.45
.438 1.57
.500 1.67

4305-10

BEST AVAILABLE COPY

II. $SG_{p/1}$

N/A a. Expoxy-coated pipelines:

$SG_{p/1} = 2.865\ W/D^2$

W = weight of bare pipe, lbs./ft.

D = diameter of pipe, inches

✓ b. For weighted pipelines:

$$SG_{p/1} = \frac{dc}{d} + \left[\frac{k_2}{(T-k_1)^2}\left(\frac{W+P}{k_3} - \frac{dc}{d}\right)\right]$$

dc = density of concrete, lbs./ft/^{3}

d = density of fluid in which pipeline is submerged, lbs./ft.^{3}

k_1, k_2, k_3 = coefficients from tables

T = thickness of concrete coating, inches

W = weight of bare pipe, lbs./ft.

P = weight of double enamel coat and felt wrap, or weight of asphaltmastic coating, lbs./ft.

$SG_{p/1}$ = ✓

✓ c. Is our calculated SG = operator's given SG

✓ = ✓

NOTE: These values should be approximately the same. If not, resolve. If the SG is close to a value of 1, the pipeline is unacceptable and must be weighted with concrete or anchored securely to the bottom.

G. Verify the following general information:

I. Water Depth, ft. 183 (Max) _____ (Min)

II. Burial Depth, ft. 3'

III. Maximum Operating Pressure (MOP) 750-1200

IV. Capacity 38 MMCFD INLET 1002 OUTLET 1000

V. No. of lines: Existing _____ Proposed _____