BOM

1 – BLADDER TYPE ACCUMULATOR
2 – ACCUMULATOR BANK ISOLATION VALVES
3 – SUCTION GATE VALVE
4 – SUCTION STRAINER
5 – CHECK VALVE
6 – ELECTRIC MOTOR AND STARTER
7 – TRIPLEX PUMP
8 – ELECTRIC PRESSURE SWITCH
9 – ACC. PRESSURE GAUGE, 0–6000 PSI
10 – HYDRAULIC PUMP
11 – MANIFOLD MANUAL REGULATOR
12 – MANIFOLD PRESSURE GAUGE, 0–10000 PSI
13 – MANIFOLD BYPASS VALVE
14 – ANNULAR MANUAL REGULATOR
15 – ANNULAR PRESSURE GAUGE, 0–3000 PSI
16 – 1" 4–WAY CONTROL VALVE
17 – ISOLATION BALL VALVE
18 – 1" ANNULAR/DIVERTER 4–WAY CONTROL VALVE
19 – LOW RIG AIR ALARM
20 – PNEUMATIC ACTUATED VALVE
21 – MANIFOLD BLEEDER VALVE
22 – LOW PRESSURE SWITCH WITH ALARM AND LIGHT
23 – AIR OPERATED PUMP
24 – AIR PUMP SUPPLY VALVE
25 – HYDRAULIC RELIEF VALVE
26 – MANIFOLD RELIEF VALVE
27 – NONE
28 – LOW FLUID ALARM
29 – BYPASS FOR PNEUMATIC ACTUATED VALVE
30 – ISOLATION GATE VALVE
31 – RIG AIR PRESSURE GAUGE, 0–200 PSI
32 – AUXILIARY VALVE
33 – AIR STRAINER
34 – NONE
35 – AIR LUBRICATOR
36 – NONE

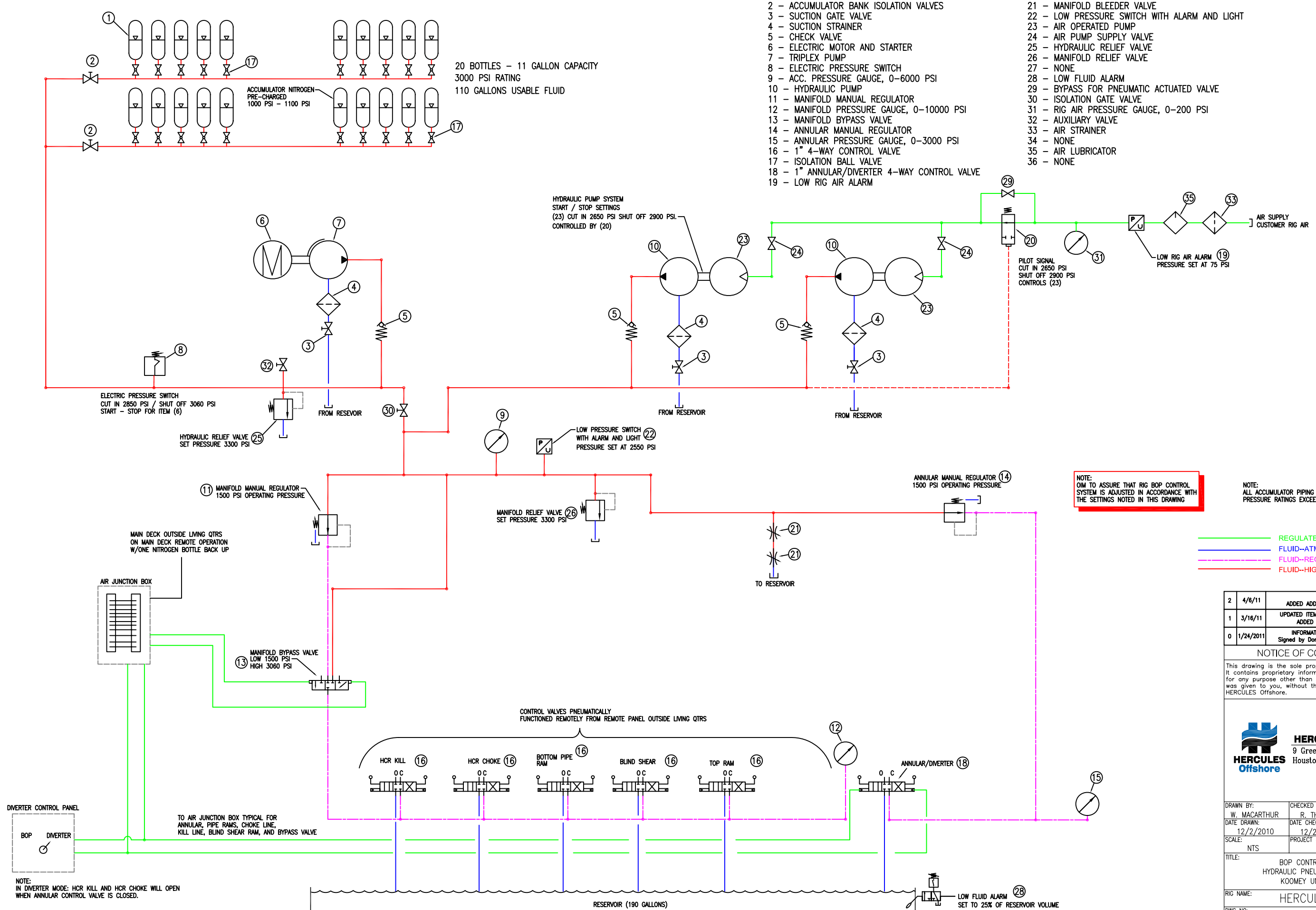

NOTE:
IN DIVERTER MODE: HCR KILL AND HCR CHOKE WILL OPEN WHEN ANNULAR CONTROL VALVE IS CLOSED.

NOTE:
OIM TO ASSURE THAT RIG BOP CONTROL SYSTEM IS ADJUSTED IN ACCORDANCE WITH THE SETTINGS NOTED IN THIS DRAWING

NOTE:
ALL ACCUMULATOR PIPING AND COMPONENTS PRESSURE RATINGS EXCEEDS RELIEF VALVE SETTINGS

REGULATED RIG AIR PRESSURE
FLUID--ATMOSPHERIC PRESSURE
FLUID--REGULATED-1500 PSI
FLUID--HIGH PRESSURE-3000 PSI

2	4/6/11	ADDED ADDITIONAL VALVE #21	WM / KC	JC
1	3/16/11	UPDATED ITEMS 22, 25, 26 & 18 ADDED BOTTLES NOTE	WM / KC	JC
0	1/24/2011	INFORMATION AS PER RIG Signed by Donald OIM on 1/24/11	WM / OIM	OIM

NOTICE OF CONFIDENTIALITY

This drawing is the sole property of HERCULES Offshore. It contains proprietary information and is not to be used for any purpose other than the purpose for which it was given to you, without the written consent of HERCULES Offshore.

HERCULES Offshore
9 Greenway Plaza, Suite 2200
Houston, Texas 77046

DRAWN BY: W. MACARTHUR	CHECKED BY: R. THOMAS	APPROVED BY: S. GILBRETH
DATE DRAWN: 12/2/2010	DATE CHECKED: 12/2/2010	DATE APPROVED: 12/2/2010
SCALE: NTS	PROJECT #	SCALE FACTOR: NTS

TITLE:
BOP CONTROL SYSTEM
HYDRAULIC PNEUMATIC SCHEMATIC
KOOMEY UNIT TYPE 80

RIG NAME: HERCULES 251

DWG NO:	REVISION:	SHEET:
251–19	2	SHT 1 OF 1