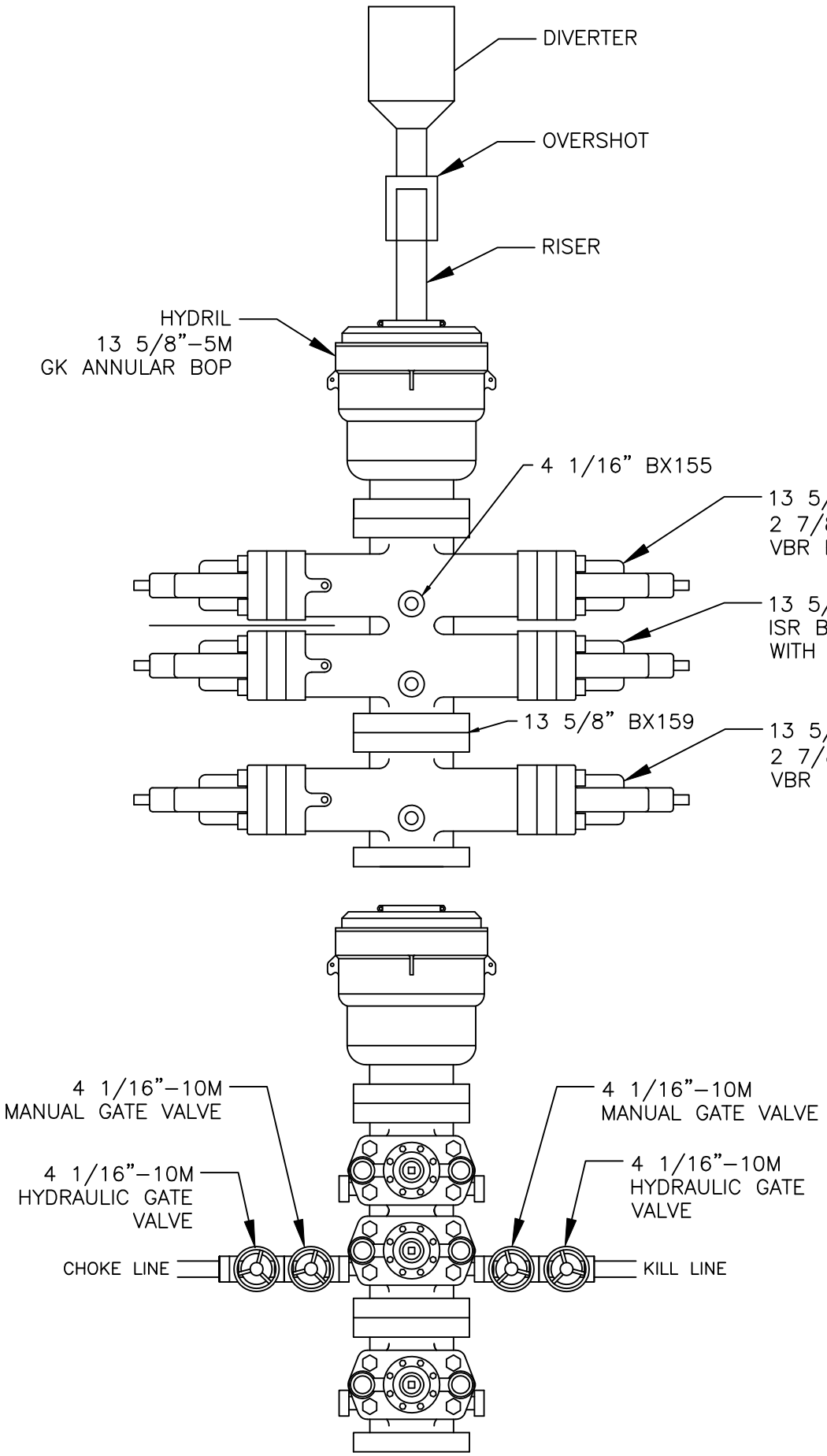


| REV No. | DESCRIPTION | BY | DATE | ENGR |
|---|---|---|---|---|
| 2 | RAM SIZES | AM | 22NOV11 | |
| 1 | ADDED TERMINOLOGY | AM | 07JUL10 | |
| 0 | ISSUED FOR REVIEW | CR | 26MAY10 | |

ROWAN COMPANIES, INC.

THIS DOCUMENT AND THE INFORMATION CONTAINED WITHIN COMPRISE PROPRIETARY INFORMATION OWNED SOLELY BY ROWAN COMPANIES, INC. THIS DOCUMENT IS PROVIDED SUBJECT TO THE PROVISION THAT THE INFORMATION HEREIN WILL NOT BE DISCLOSED OR REPRODUCED UNLESS SPECIFICALLY AUTHORIZED IN WRITING BY ROWAN COMPANIES, INC. NOR WILL BE USED IN ANY WAY DETRIMENTAL TO OR IN COMPETITION WITH INTEREST OF ROWAN COMPANIES, INC. THIS DOCUMENT, REPRODUCTIONS PREVIOUSLY AUTHORIZED IN WRITING AND ASSOCIATED INFORMATION SHALL BE RETURNED WHEN THEY HAVE SERVED THEIR INTENDED PURPOSES, OR ON DEMAND.

ROWAN COMPANIES, INC. HOUSTON TEXAS

DWG. TITLE:

ROWAN "CECIL PROVINE"
B.O.P. STACK
13 5/8" x 10M

| | | | |
|---|---|---|---|
| DWN. AM | DATE 22NOV11 | ENGR. AM | DATE |
| CHK. BP | DATE 22NOV11 | APPR. | DATE |
| HULL FIRST USED ON | MADE FROM DWG. NO. | PRODUCTION DWG. NO. | |
| SCALE: NTS | C.N. | SHEET 1 OF 1 | |
| DESIGN DRAWING NO. 039–BOP_13 5–8 | | REV. 1 | |

Copyright © 2011 By
ROWAN COMPANIES, INC.

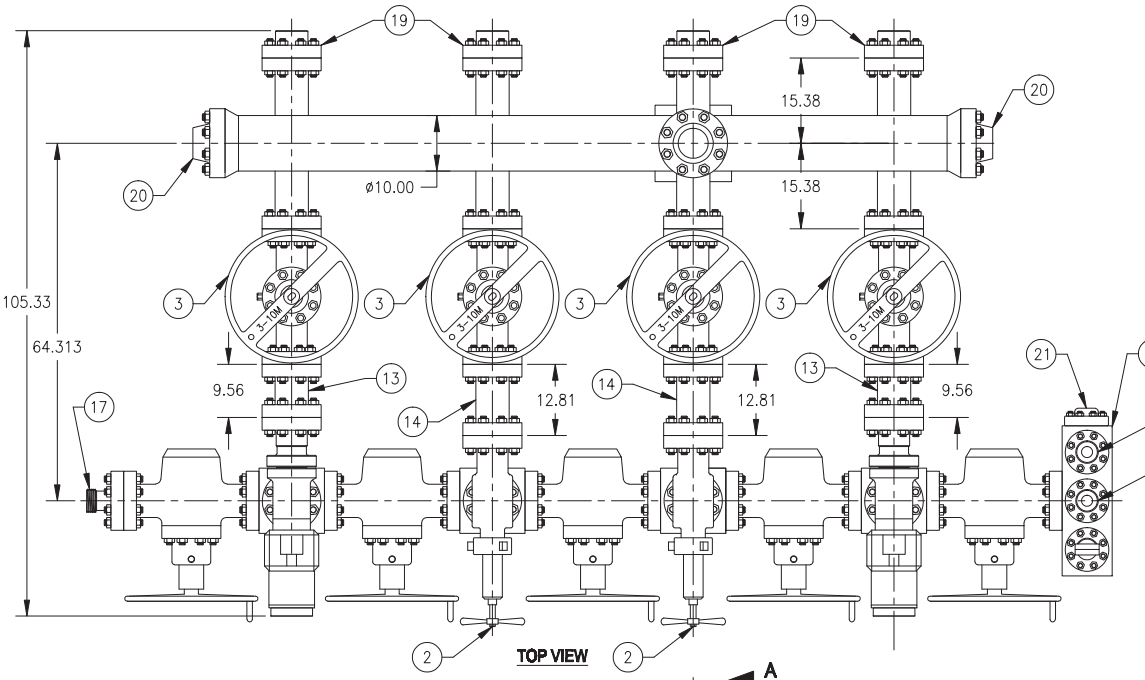


TOP VIEW

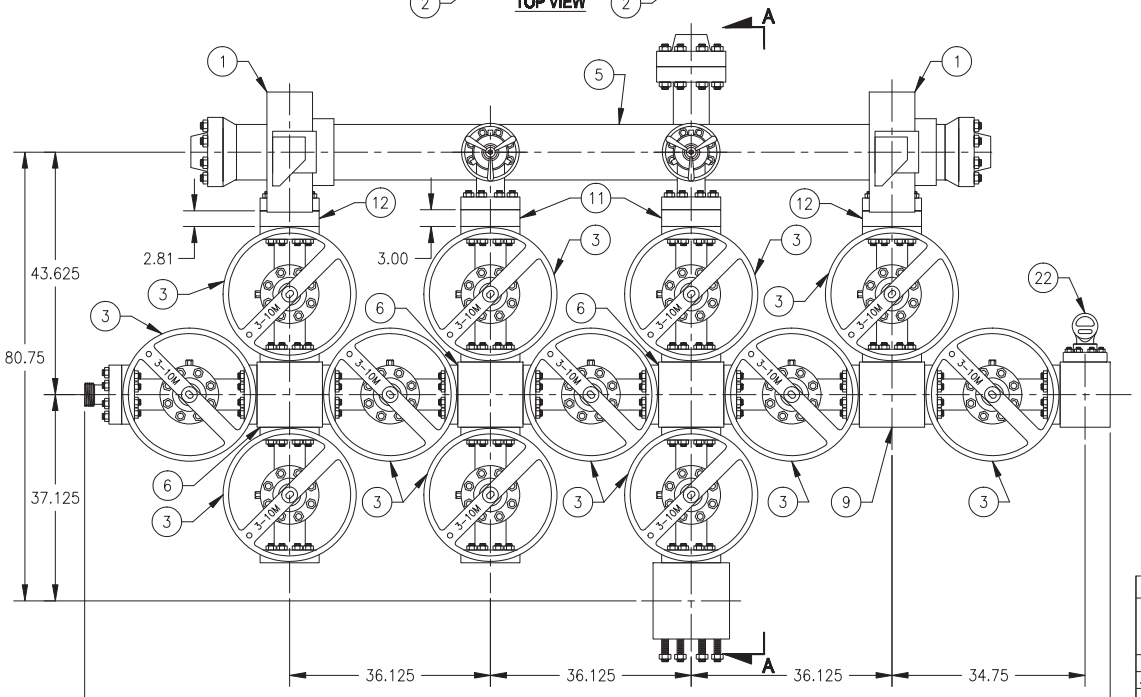


FRONT VIEW

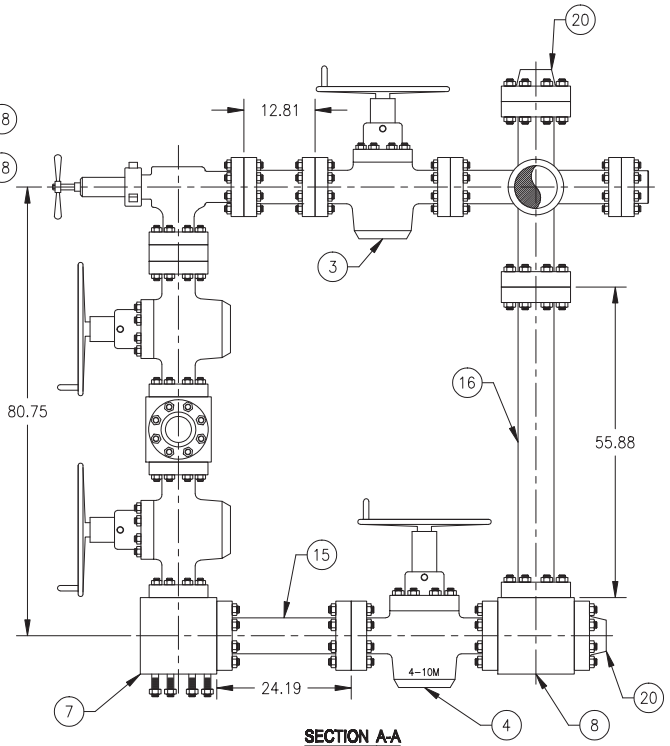


SECTION A-A

| REV | ECN# | ECN DESCRIPTION | BY | CKD | APP | DATE |
|---|---|---|---|---|---|---|
| A | ECN # | NEW RELEASE | SJD | LZH | JWG | 03/28/11 |

UNLESS OTHERWISE SPECIFIED

ALL DIMENSIONS ARE IN INCHES.
ALL DIMENSIONS IN [ ] ARE MILLIMETERS.
ALL DIMENSIONS IN ( ) ARE REFERENCE.
BREAK ALL SHARP EDGES TO .01–.03 x 45° OR R.01–R.03.

MATERIAL AND HEAT TREAT: SEE BOM

TOLERANCE AND FINISH

| | | | |
|---|---|---|---|
| .X | ±.1 | FRACTIONAL: | ±1/16 |
| .XX | ±.03 | ANGULAR: | ±.5° |
| .XXX | ±.015 | MACH.FINISH: | 125√ |

DWN: SJD DATE: 03/28/11
CKD: LZH DATE: 03/28/11
APP: JWG DATE: 03/28/11

DOYLES TEXAS USA

TITLE: CHOKE MANIFOLD ASSEMBLY, 3–1/16" 10M, (2) HYD CHOKE & (2) ADJ CHOKE, BUFFER CHAMBER

THIS DOCUMENT CONTAINS CONFIDENTIAL AND PROPRIETARY INFORMATION OF DOYLES. THIS DOCUMENT AND THE INFORMATION DISCLOSED WITHIN SHALL NOT BE REPRODUCED IN ANY FORM, USED OR DISCLOSED TO OTHERS FOR ANY PURPOSE WITHOUT THE EXPRESS WRITTEN PERMISSION OF DOYLES.

SCALE: 1:16 | EST. WT: N/A LBS. | SHT 1 OF 1
SIZE: C | DWG. 7620–1017 | REV: A

DWG INFO

## B.O.P. ACCUMULATOR SYSTEM FOR RIG CECIL PROVINE

### B.O.P. CONTROL SYSTEM

| | | |
|---|---|---|
| MANUFACTURER | : | KOOMEY |
| TYPE | : | 80 |
| MODEL | : | 230 - 113X |
| WORKING PRESSURE | : | 3,000 psi, 4,000 psi EMERGENCY |
| ACCUMULATOR: (No.of bottles & size) | : | 23 - 11 GALLON BOTTLES |
| RESERVOIR CAPACITY (gallons) | : | 290 GALLONS |
| ELECTRIC PUMPS | : | TRIPLEX, 25 HP |
| AIR PUMPS | : | USA 26X - 60:1 RATIO, 5,000 psi |
| MASTER CONTROL PANEL LOCATION | : | RIG FLOOR |
| REMOTE CONTROL PANEL LOCATION | : | PORT AFT OF LIVING QUARTERS |

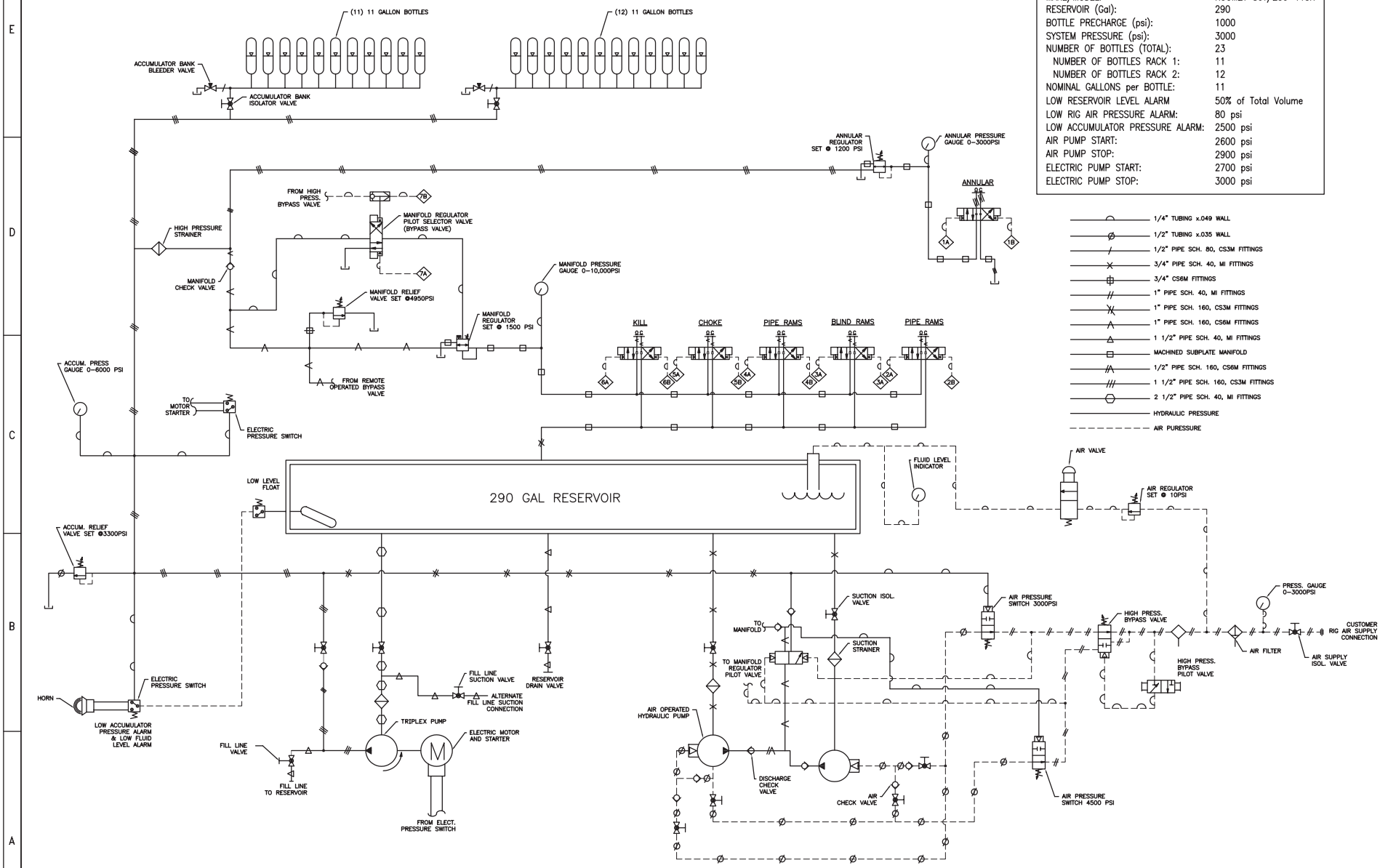


## ACCUMULATOR

| | |
|---|---|
| MAKE/MODEL: | KOOMEY 80T/230-113X |
| RESERVOIR (Gal): | 290 |
| BOTTLE PRECHARGE (psi): | 1000 |
| SYSTEM PRESSURE (psi): | 3000 |
| NUMBER OF BOTTLES (TOTAL): | 23 |
| NUMBER OF BOTTLES RACK 1: | 11 |
| NUMBER OF BOTTLES RACK 2: | 12 |
| NOMINAL GALLONS per BOTTLE: | 11 |
| LOW RESERVOIR LEVEL ALARM | 50% of Total Volume |
| LOW RIG AIR PRESSURE ALARM: | 80 psi |
| LOW ACCUMULATOR PRESSURE ALARM: | 2500 psi |
| AIR PUMP START: | 2600 psi |
| AIR PUMP STOP: | 2900 psi |
| ELECTRIC PUMP START: | 2700 psi |
| ELECTRIC PUMP STOP: | 3000 psi |

- 1/4" TUBING x.049 WALL
- 1/2" TUBING x.035 WALL
- 1/2" PIPE SCH. 80, CS3M FITTINGS
- 3/4" PIPE SCH. 40, MI FITTINGS
- 3/4" CS6M FITTINGS
- 1" PIPE SCH. 40, MI FITTINGS
- 1" PIPE SCH. 160, CS3M FITTINGS
- 1" PIPE SCH. 160, CS6M FITTINGS
- 1 1/2" PIPE SCH. 40, MI FITTINGS
- MACHINED SUBPLATE MANIFOLD
- 1/2" PIPE SCH. 160, CS6M FITTINGS
- 1 1/2" PIPE SCH. 160, CS3M FITTINGS
- 2 1/2" PIPE SCH. 40, MI FITTINGS
- HYDRAULIC PRESSURE
- AIR PURESSURE

### REFERENCES

| NO. | DWG.NO. | DESCRIPTION |
|---|---|---|

### GENERAL NOTES

### MATERIAL GRADE

| NO. | DESCRIPTION | BY | DATE | ENGR |
|---|---|---|---|---|
| 2 | ADDED ADDITIONAL INFO | AM | 08JUN11 | AM |
| 1 | MODIFIED TEXT | KG | 31DEC10 | AM |
| 0 | ISSUED FOR REVIEW | KG | 29DEC10 | AM |

| REVISION NO. | 0 |
|---|---|
| DATE | XX XXX 06 |

| | |
|---|---|
| ABS | |
| DNV | |
| USCG | |
| OWNER | |
| SHIPYARD | |
| VENDOR | |
| PROJ. ENGR. | |
| NAVAL ARCH/WT. CTRL | |
| ENGR. STRUCT | |
| PIPING | |
| ELECT | |
| WELDING ENG. | |
| DESIGN DRAFTING | |
| FIELD DRAFTING | |
| TOTAL PRINTS | |
| REPRO. COPIES | |

ROWAN COMPANIES, INC.
THIS DOCUMENT AND THE INFORMATION CONTAINED WITHIN COMPRISE PROPRIETARY INFORMATION OWNED SOLELY BY ROWAN COMPANIES, INC. THIS DOCUMENT IS PROVIDED SUBJECT TO THE PROVISION THAT THE INFORMATION HEREIN WILL NOT BE DISCLOSED OR REPRODUCED UNLESS SPECIFICALLY AUTHORIZED IN WRITING BY ROWAN COMPANIES, INC. NOR WILL BE USED IN ANY WAY DETRIMENTAL TO OR IN COMPETITION WITH INTEREST OF ROWAN COMPANIES, INC. THIS DOCUMENT, REPRODUCTIONS PREVIOUSLY AUTHORIZED IN WRITING AND ASSOCIATED INFORMATION SHALL BE RETURNED WHEN THEY HAVE SERVED THEIR INTENDED PURPOSES, OR ON DEMAND.

ROWAN COMPANIES, INC. HOUSTON TEXAS

DWG. TITLE:
ROWAN "CECIL PROVINE"
BOP CONTROL SYSTEM

| | | | |
|---|---|---|---|
| DWN. KG | DATE 29DEC10 | ENGR. AM | DATE |
| CHK. AM | DATE 29DEC10 | APPR. | DATE |
| HULL FIRST USED ON | MADE FROM DWG. NO. | PRODUCTION DWG. NO. | |
| SCALE AS SHOWN | C.N. | SHEET 1 OF 1 | |
| DESIGN DRAWING NO. M039-BOP CONT. SYS | | | REV. 2 |

Copyright © 2010 By ROWAN COMPANIES, INC.